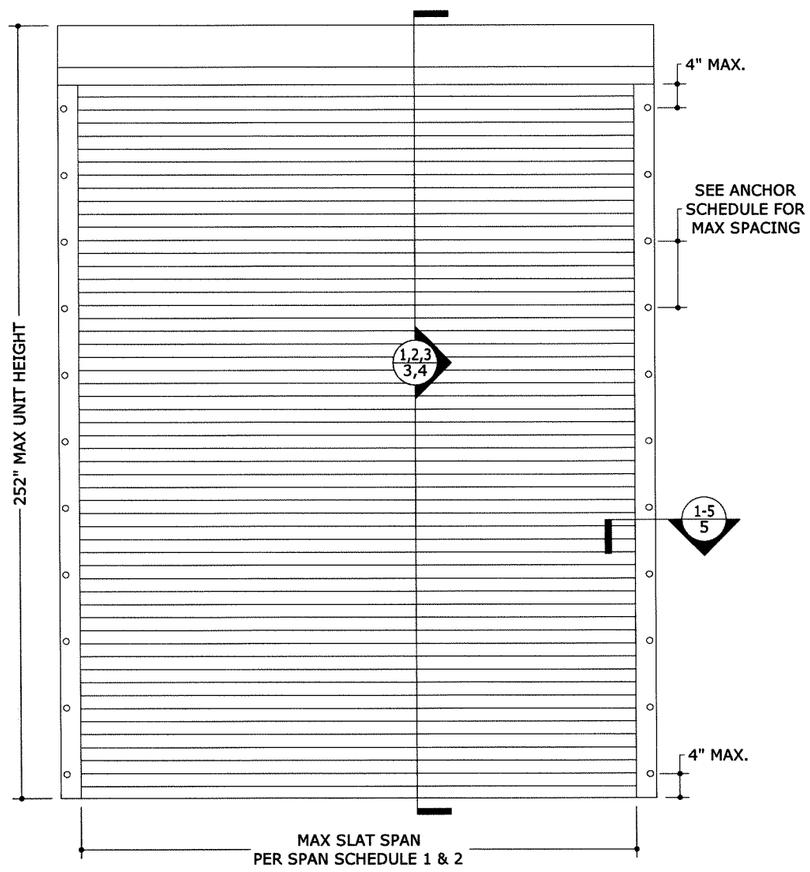

1 / 1 END RETENTION SHUTTER WITH SINGLE WALL SLATS

N.T.S. EXTERIOR ELEV

MAXIMUM ALLOWABLE DESIGN PRESSURES:

AS NOTED IN SCHEDULES

DESIGN NOTES:

POSITIVE AND NEGATIVE DESIGN PRESSURES CALCULATED FOR USE WITH THIS SYSTEM SHALL BE DETERMINED BY OTHERS ON A JOB-SPECIFIC BASIS IN ACCORDANCE WITH THE GOVERNING CODE. SITE-SPECIFIC WIND LOAD REQUIREMENTS SHALL BE DETERMINED IN ACCORDANCE WITH ASCE 7 AND THE GOVERNING BUILDING CODE BY SEPARATE ENGINEERING CERTIFICATION AND SHALL BE LESS THAN OR EQUAL TO THE POSITIVE OR NEGATIVE DESIGN PRESSURE CAPACITY VALUE LISTED HEREIN FOR ANY ASSEMBLY WITHIN THE LIMITATIONS STATED HEREIN.

GENERAL NOTES:

1. THE SYSTEM DESCRIBED HEREIN HAS BEEN DESIGNED AND TESTED IN ACCORDANCE WITH THE FLORIDA BUILDING CODE SIXTH EDITION (2017), FOR USE OUTSIDE THE HIGH VELOCITY HURRICANE ZONE. THIS SYSTEM HAS BEEN TESTED IN ACCORDANCE WITH ASTM E330, E1996, AND E1886 TESTING STANDARDS PER TEST REPORT D6939.01-109-44, D6939.02-109-44 AND D6939.03-109-44 BY ARCHITECTURAL TESTING.
2. NO 33-1/3% INCREASE IN ALLOWABLE STRESS HAS BEEN USED IN THE DESIGN OF THIS SYSTEM. WIND LOAD DURATION FACTOR Cd=1.6 HAS BEEN USED FOR WOOD ANCHOR DESIGN.
3. THE ARCHITECT/ENGINEER OF RECORD FOR THE PROJECT SUPERSTRUCTURE WITH WHICH THIS DESIGN IS USED SHALL BE RESPONSIBLE FOR THE INTEGRITY OF ALL SUPPORTING SURFACES TO THIS DESIGN WHICH SHALL BE COORDINATED BY THE PERMITTING CONTRACTOR.
4. POSITIVE AND NEGATIVE DESIGN PRESSURES CALCULATED FOR USE WITH THIS SYSTEM SHALL BE DETERMINED PER SEPARATE ENGINEERING IN ACCORDANCE WITH THE GOVERNING CODE. PRESSURE REQUIREMENTS SHALL BE LESS THAN OR EQUAL TO THE POSITIVE OR NEGATIVE DESIGN PRESSURE CAPACITY VALUES LISTED HEREIN FOR ANY ASSEMBLY AS SHOWN.
5. DESIGN PRESSURES NOTED HEREIN ARE BASED ON MAXIMUM TESTED PRESSURES DIVIDED BY A 1.5 SAFETY FACTOR.
6. THE SYSTEM DETAILED HEREIN IS GENERIC AND DOES NOT PROVIDE INFORMATION FOR A SPECIFIC SITE. FOR SITE CONDITIONS DIFFERENT FROM THE CONDITIONS DETAILED HEREIN, A LICENSED ENGINEER OR REGISTERED ARCHITECT SHALL PREPARE SITE SPECIFIC DOCUMENTS FOR USE IN CONJUNCTION WITH THIS DOCUMENT.
7. PERMIT HOLDER SHALL VERIFY THE ADEQUACY OF THE EXISTING STRUCTURE TO WITHSTAND SUPERIMPOSED LOADS.
8. CONCRETE ANCHORS NOTED HEREIN SHALL BE EMBEDDED TO UN-CRAKCED CONCRETE ONLY. INSTALL ALL CONCRETE ANCHORS PER MANUFACTURER'S RECOMMENDATIONS.
9. ANCHORS SHALL BE INSTALLED IN ACCORDANCE WITH MANUFACTURER'S RECOMMENDATIONS. MINIMUM EMBEDMENT SHALL BE AS NOTED HEREIN. MINIMUM EMBEDMENT AND EDGE DISTANCE EXCLUDES STUCCO, FOAM, BRICK, AND OTHER WALL FINISHES.
10. MAXIMUM SLAT SPAN: 18'-0".
11. MAXIMUM ALLOWABLE DESIGN PRESSURE: PER DESIGN SCHEDULES.
12. ENGINEER SEAL AFFIXED HERETO VALIDATES STRUCTURAL DESIGN AS SHOWN ONLY. USE OF THIS SPECIFICATION BY CONTRACTOR, et. al. INDEMNIFIES & SAVES HARMLESS THIS ENGINEER FOR ALL COST & DAMAGES INCLUDING LEGAL FEES & APPELLATE FEES RESULTING FROM MATERIAL FABRICATION, SYSTEM ERECTION, & CONSTRUCTION PRACTICES BEYOND THAT WHICH IS CALLED FOR BY LOCAL, STATE, & FEDERAL CODES & FROM DEVIATIONS OF THIS PLAN.
13. EXCEPT AS EXPRESSLY PROVIDED HEREIN, NO ADDITIONAL CERTIFICATIONS OR AFFIRMATIONS ARE INTENDED.
14. ALTERATIONS, ADDITIONS, HIGHLIGHTING, OR OTHER MARKINGS TO THIS DOCUMENT ARE NOT PERMITTED AND INVALIDATE THIS CERTIFICATION.
15. END RETENTION SHUTTER ASSEMBLY WITH SINGLE WALL SLATS SHALL BEAR A PERMANENT LABEL ON THE BOTTOM OF THE HOOD OR ON THE BOTTOM SLAT FACING THE EXTERIOR WITH THE FOLLOWING MINIMUM INFORMATION:
    ALUTECH UNITED, INC.
    SELBYVILLE, DE
    MISSILE LEVEL D, WIND ZONE 4 - ASTM E1886, E1996 & E330
    FLORIDA PRODUCT APPROVAL #

08/11/2017 - 9:59am nickn V:\Projects\14-1323 Magnum III (Security Star) Slat Shutter Florida Product Approval-I SWP\2017 FBC Update\14-1323e-Dwg-FL17344.1.dwg

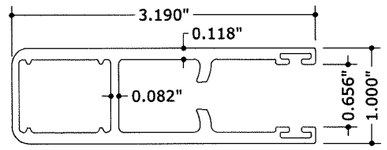

1 MAGNUM 3.57 END-RETENTION RAIL

8" = 1'-0" 6063-T5 ALUM.

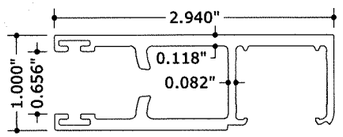

2 SNAP RAIL END-RETENTION RAIL

8" = 1'-0" 6063-T5 ALUM.

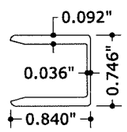

3 END-RETENTION RAIL INSERT

8" = 1'-0" PLASTIC

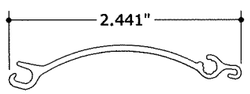

4 SINGLE WALL SLAT

8" = 1'-0" 6063-T5 ALUM.

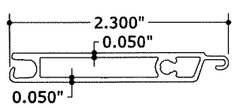

5 BASE SLAT

8" = 1'-0" 6063-T5 ALUM.

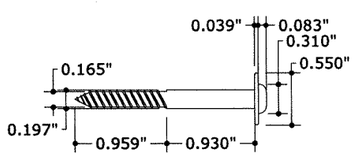

6 RETAINING SCREW

8" = 1'-0" 304 S.S.

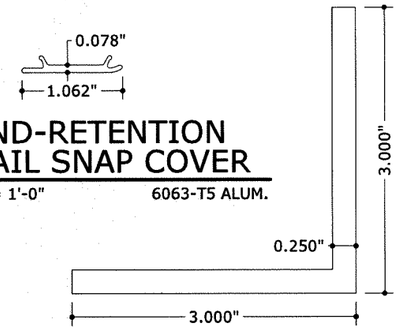

7 END-RETENTION RAIL SNAP COVER

8" = 1'-0" 6063-T5 ALUM.

8 3"x3"x0.250" ANGLE

8" = 1'-0" 6063-T5 ALUM.

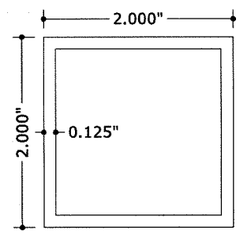

9 2"x2"x0.125" TUBE

8" = 1'-0" 6063-T5 ALUM.

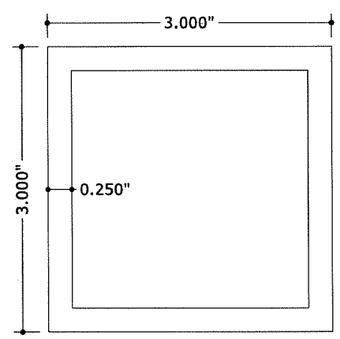

10 3"x3"x0.250" TUBE

8" = 1'-0" 6063-T5 ALUM.

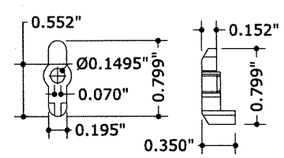

11 SLAT SIDE LOCK

8" = 1'-0" BAYBLEND T85 POLYCARB.

ALLOWABLE SLAT SPAN SCHEDULES:

SPAN SCHEDULE 1
MAGNUM 3.57 RETENTION SHUTTER WITH SINGLE WALL SLATS

SLAT SPAN	ALLOWABLE DESIGN PRESSURE
48.0"	± 206.7 PSF
56.0"	± 163.4 PSF
64.0"	± 139.9 PSF
72.0"	± 125.6 PSF
80.0"	± 116.1 PSF
88.0"	± 109.3 PSF
96.0"	± 104.2 PSF
104.0"	± 100.0 PSF
112.0"	± 96.6 PSF
120.0"	± 93.6 PSF
128.0"	± 91.1 PSF
136.0"	± 88.8 PSF
144.0"	± 86.7 PSF
152.0"	± 81.3 PSF
160.0"	± 76.6 PSF
168.0"	± 72.4 PSF
176.0"	± 68.7 PSF
184.0"	± 65.4 PSF
192.0"	± 62.4 PSF
200.0"	± 59.7 PSF
208.0"	± 57.3 PSF
216.0"	± 55.0 PSF

SPAN SCHEDULE 2
SNAP RAIL RETENTION SHUTTER WITH SINGLE WALL SLATS

SLAT SPAN	ALLOWABLE DESIGN PRESSURE
48.0"	± 130.0 PSF
56.0"	± 95.0 PSF
64.0"	± 77.7 PSF
72.0"	± 68.3 PSF
80.0"	± 62.8 PSF
88.0"	± 59.3 PSF
96.0"	± 56.9 PSF
104.0"	± 55.1 PSF
112.0"	± 53.8 PSF
120.0"	± 52.6 PSF
128.0"	± 51.7 PSF
136.0"	± 50.8 PSF
144.0"	± 50.0 PSF

SEPARATION FROM GLAZING SCHEDULES*:

GLASS SEPARATION SCHEDULE
MAGNUM 3.57 END RETENTION SHUTTER WITH SINGLE WALL SLATS*

SLAT SPAN	INSTALLATIONS ≤ 30' ABOVE GRADE	INSTALLATIONS > 30' ABOVE GRADE
48.0"	6.1"	6.1"
56.0"	14.0"	6.4"
64.0"	14.0"	6.8"
72.0"	14.0"	7.2"
80.0"	14.0"	7.5"
88.0"	14.0"	7.9"
96.0"	14.0"	8.3"
104.0"	14.0"	8.6"
112.0"	14.0"	8.9"
120.0"	14.0"	9.3"
128.0"	14.0"	9.6"
136.0"	14.0"	9.9"
144.0"	14.0"	10.3"
152.0"	12.2"	10.6"
160.0"	12.2"	11.0"
168.0"	12.2"	11.3"
176.0"	12.2"	11.7"
184.0"	12.2"	12.0"
192.0"	12.4"	12.4"
200.0"	12.7"	12.7"
208.0"	13.1"	13.1"
216.0"	13.4"	13.4"

GLASS SEPARATION SCHEDULE
SNAP RAIL END RETENTION SHUTTER WITH SINGLE WALL SLATS*

SLAT SPAN	INSTALLATIONS ≤ 30' ABOVE GRADE	INSTALLATIONS > 30' ABOVE GRADE
48.0"	9.0"	5.6"
56.0"	10.2"	6.0"
64.0"	10.2"	6.4"
72.0"	10.2"	6.8"
80.0"	10.2"	7.2"
88.0"	10.2"	7.5"
96.0"	10.2"	7.8"
104.0"	10.2"	8.1"
112.0"	10.2"	8.5"
120.0"	10.2"	8.8"
128.0"	10.2"	9.1"
136.0"	10.2"	9.4"
144.0"	10.2"	9.7"

SPAN AND GLAZING SEPARATION NOTES:

- SLAT SPAN IS DEFINED AS THE DISTANCE BETWEEN RAILS.
- SEPARATION FROM GLAZING IS ONLY REQUIRED IN ASTM WIND ZONE 4 OR ESSENTIAL FACILITIES AS DEFINED IN ASTM E1996.
- LINEAR INTERPOLATION BETWEEN SHUTTER SPANS IS NOT PERMITTED. FOR SPANS BETWEEN THOSE INDICATED ABOVE, THE SEPARATION FROM GLASS AND/OR DESIGN PRESSURE FOR THE NEXT HIGHER SPAN SHALL BE USED.

*** NOTE: APPLIES TO INSTALLATIONS LOCATED WITHIN WIND ZONE 4 OR ESSENTIAL FACILITIES.**

FRANK L... LIC... No PE... STA... FLO... PROFESSION...

08/11/2017 - 9:59am rickn V:\Projects\14-1323 Magnum III (Security Star) Slat Shutter Florida Product Approval-I.S\WP\2017 FBC Update\14-1323e-Dwg-FL17344.1.dwg

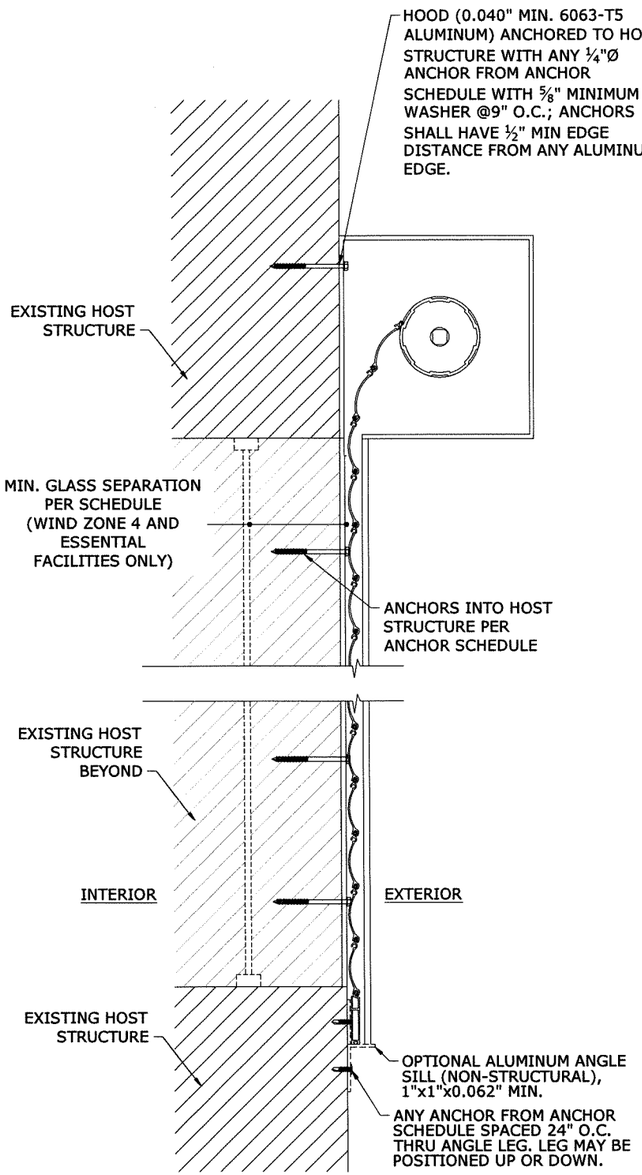

1/3 TYPICAL WALL MOUNT

N.T.S. VERT SECTION

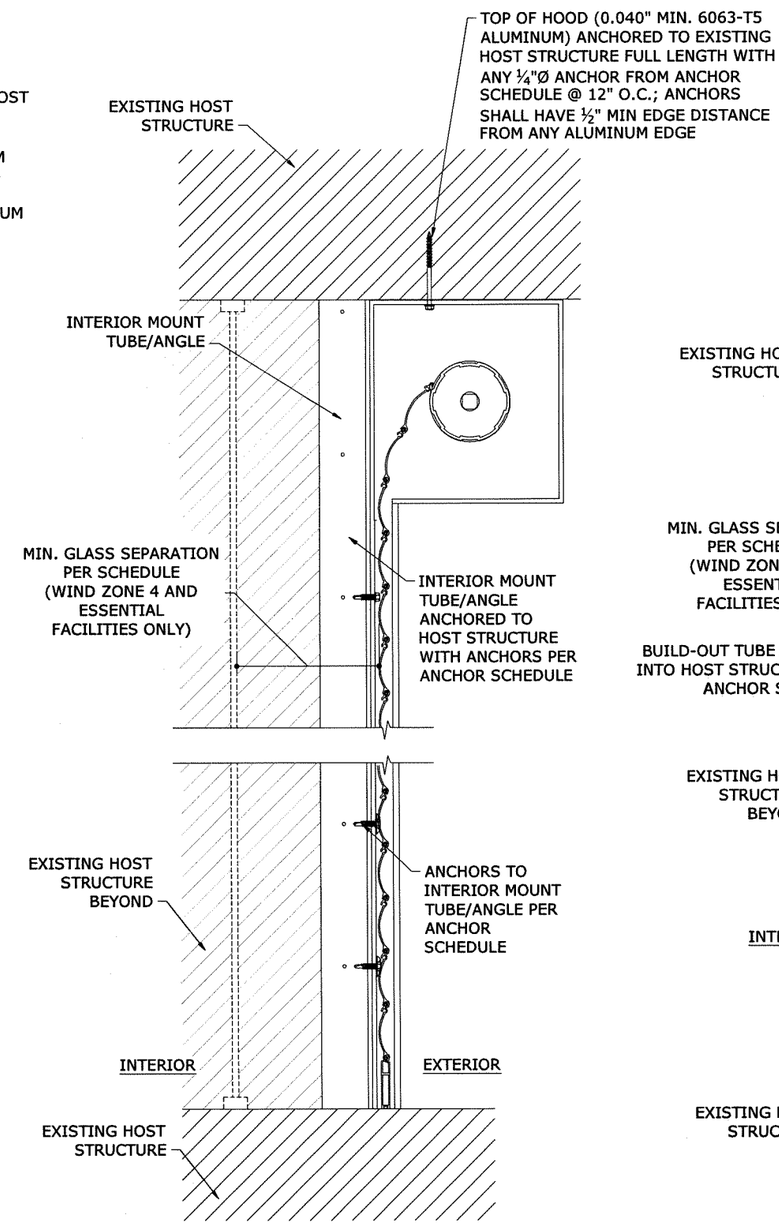

2/3 TYPICAL INTERIOR MOUNT

N.T.S. VERT SECTION

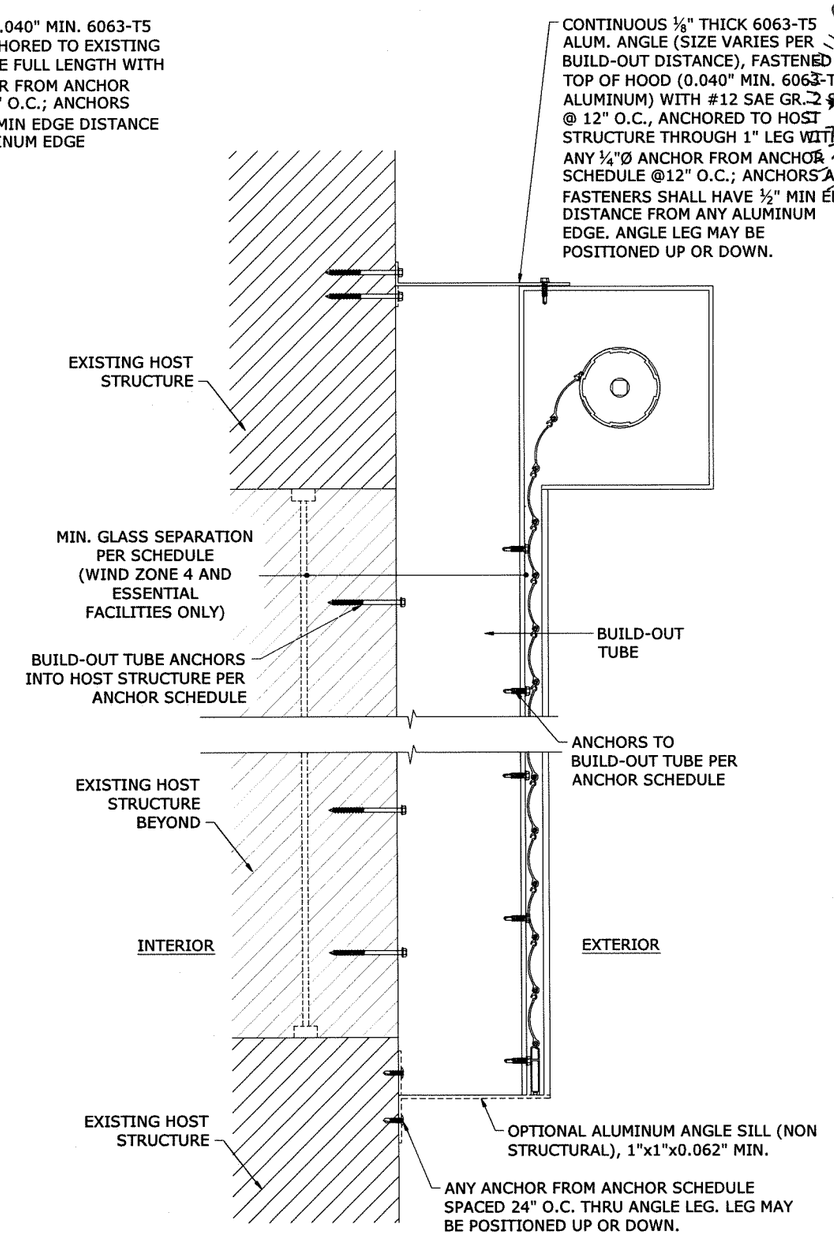

3/3 BUILD-OUT WALL MOUNT

N.T.S. VERT SECTION

V:\Projects\14-1323 Magnum III (Security Star) Slat Shutter Florida Product Approval-I.SWP\2017 FBC Update\14-1323e-Dwg-FL17344.1.dwg
08/11/2017 - 9:59am nickn

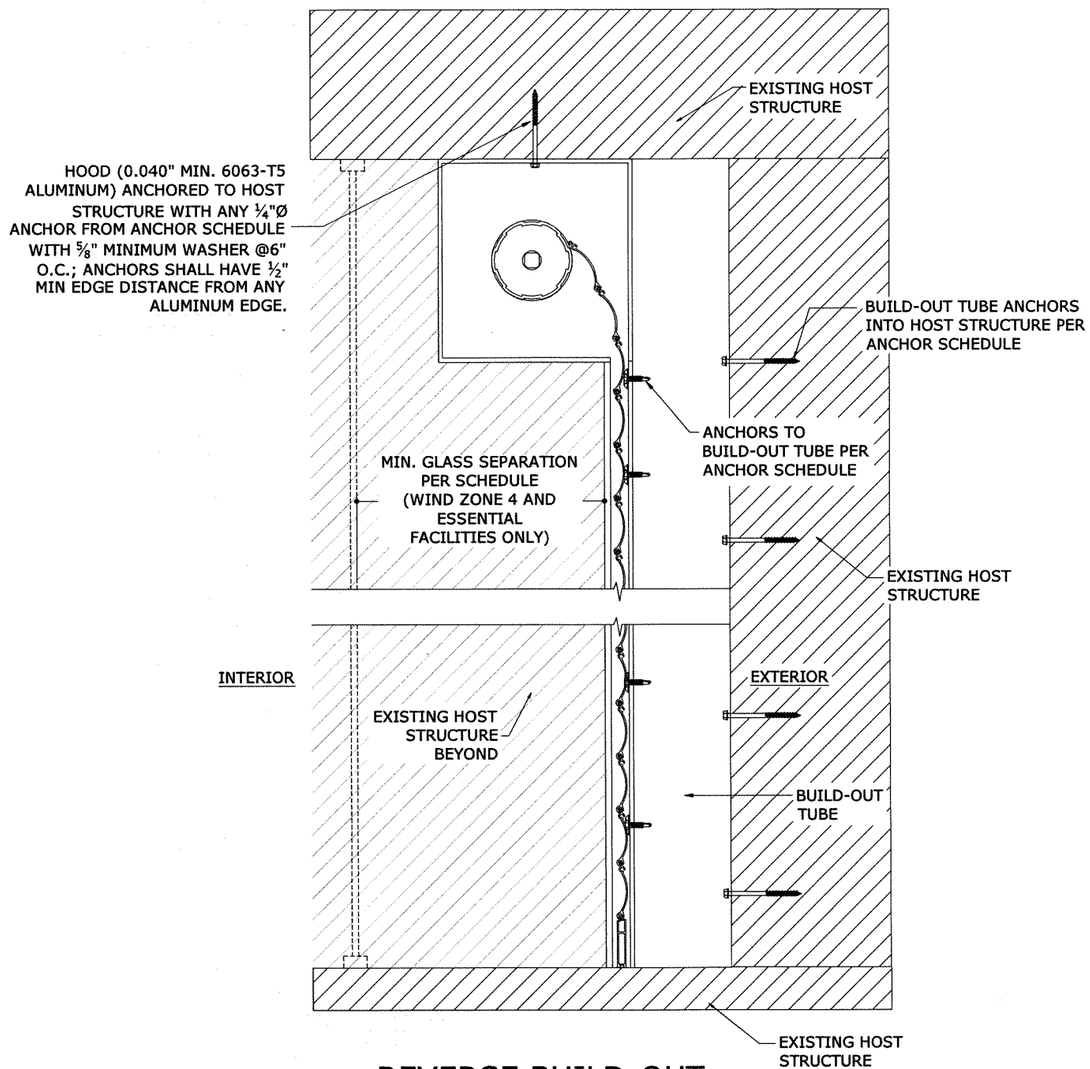

REVERSE BUILD-OUT WALL MOUNT

1/4 N.T.S. VERT SECTION

NOTE: THIS DETAIL IS INTENDED FOR SHUTTERS WITH THE MAGNUM 3.57 END RETENTION RAIL ONLY.

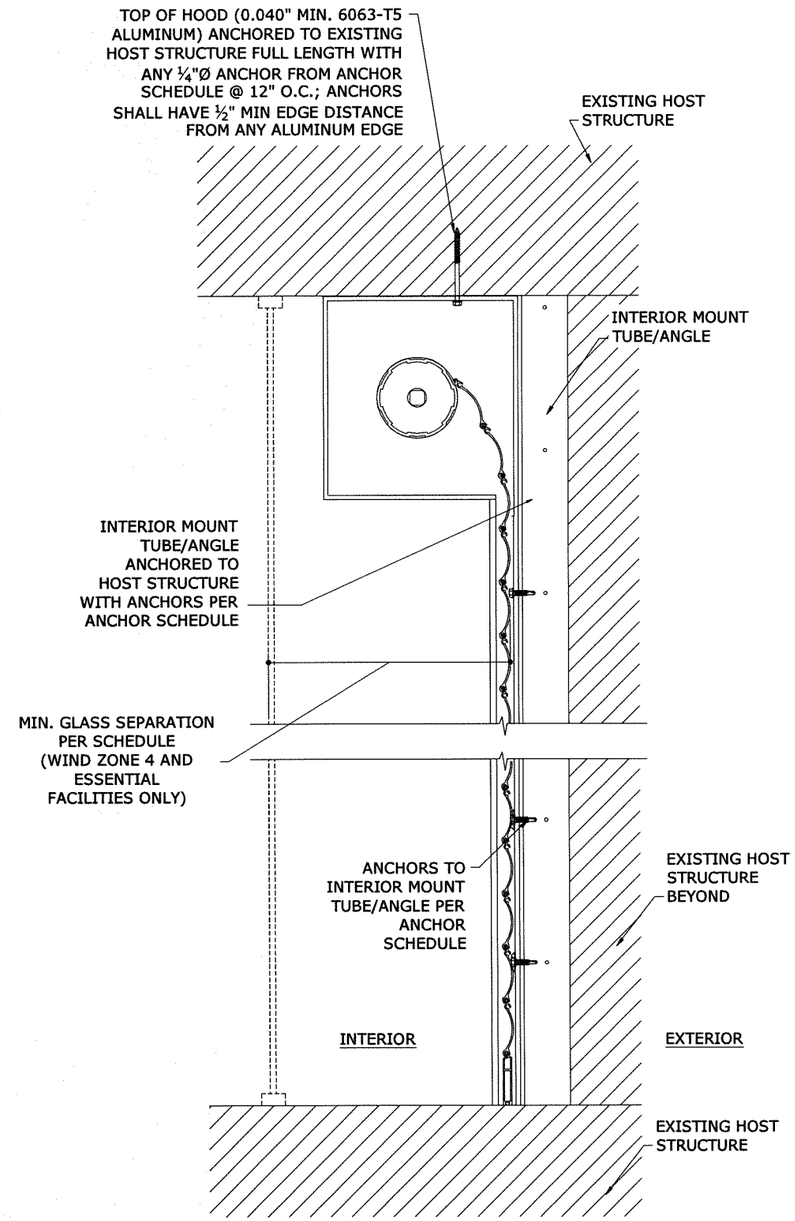

REVERSE INTERIOR MOUNT

2/4 N.T.S. VERT SECTION

NOTE: THIS DETAIL IS INTENDED FOR SHUTTERS WITH THE MAGNUM 3.57 END RETENTION RAIL ONLY.

08/11/2017 - 9:59am nickn V:\Projects\14-1323 Magnum III (Security Star) Slat Shutter Florida Product Approval-I.SWP2017 FBC Update\14-1323a-Dwg-FL17344.1.dwg

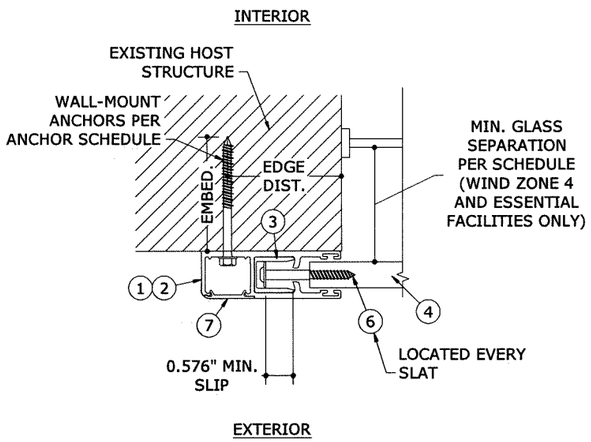

1/5 END RETENTION TYPICAL WALL MOUNT

N.T.S. HORIZ SECTION

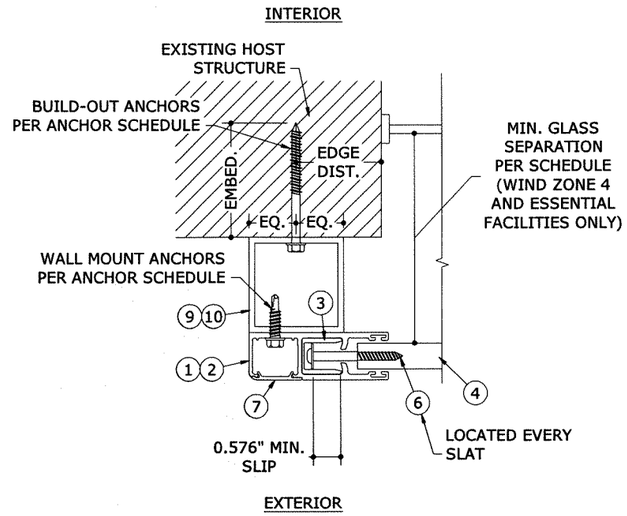

2/5 END RETENTION TYP. BUILD-OUT MOUNT

N.T.S. HORIZ SECTION

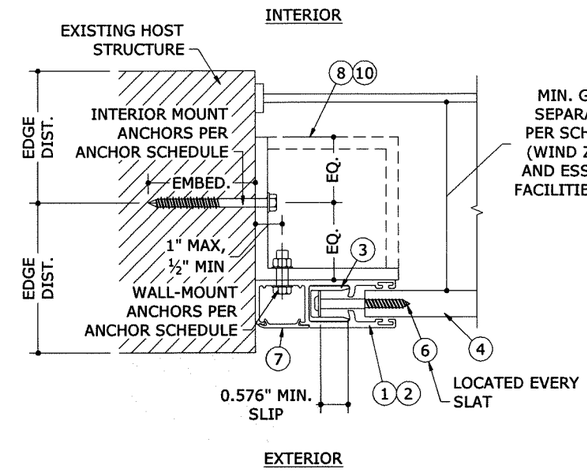

3/5 END RETENTION TYP. INTERIOR MOUNT

N.T.S. HORIZ SECTION

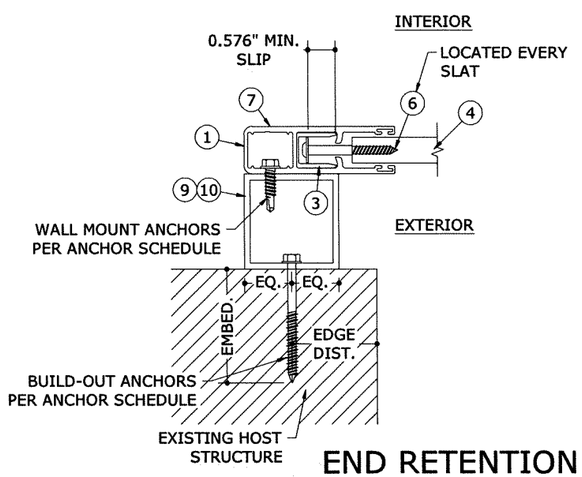

4/5 END RETENTION TYP. BUILD-OUT REVERSE MOUNT

N.T.S. HORIZ SECTION

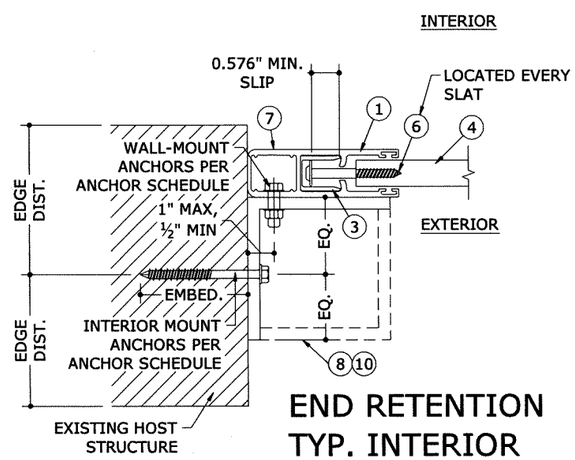

5/5 END RETENTION TYP. INTERIOR REVERSE MOUNT

N.T.S. HORIZ SECTION

ANCHOR SCHEDULE:

(SEE DESIGN SCHEDULES ON SHEETS 6-17 FOR REQUIRED ANCHOR SPACING)

ANCHOR	SUBSTRATE	MINIMUM EMBEDMENT	MINIMUM EDGE DISTANCE
1/4" ELCO ULTRACON	2846 PSI MIN. CONCRETE	1.75"	2.5"
1/4" SS ITW TAPCON	3192 PSI MIN. CONCRETE	1.75"	2.5"
5/16" ITW TAPCON	2899 PSI MIN. CONCRETE	2.25"	3.125"
	GROUT-FILLED CONCRETE BLOCK	2.25"	4.0"
	HOLLOW CONCRETE BLOCK	1.75"	4.0"
1/4" POWERS POWER-BOLT	3000 PSI MIN. CONCRETE	2.5"	3.0"
1/4" ALL-POINTS SOLID-SET	3000 PSI MIN. CONCRETE	0.875"	3.0"
	HOLLOW CONCRETE BLOCK	0.875"	3.0"
1/4" LAG SCREW	G=0.55 MIN. WOOD	1.5"	0.75"
5/16" LAG SCREW	G=0.42 MIN. WOOD	2.0"	0.75"
#14 WOOD SCREW	G=0.55 MIN. WOOD	1.5"	0.75"
#14 316 SS SMS (OR 1/4-20 316 SS THRU-BOLT) W/ 5/8" WASHER	1/8" THICK MIN. 6063-T5 ALUMINUM OR A36 STEEL	FULL THREAD PENETRATION	0.5"
#14 316 SS SMS (OR 1/4-20 316 SS THRU-BOLT) W/ 5/8" WASHER	0.25" THICK MIN. 6063-T5 ALUMINUM OR A36 STEEL	FULL THREAD PENETRATION	0.5"
3/8" POWERS WEDGE BOLT	3000 PSI MIN. CONCRETE	3.5"	4.5"

ANCHOR NOTES:

1. ANCHORS SHALL BE INSTALLED IN ACCORDANCE WITH MANUFACTURERS' RECOMMENDATIONS.
2. WHERE ANCHORS FASTEN TO NARROW FACE OF STUD FRAMING, ANCHOR SHALL BE LOCATED IN CENTER OF NOMINAL 2x (MIN) WOOD STUD (i.e. 3/4" EDGE DISTANCE IS ACCEPTABLE FOR ANCHORS TO WOOD FRAMING).
3. MINIMUM EMBEDMENT SHALL BE AS NOTED IN ANCHOR SCHEDULE. MINIMUM EMBEDMENT AND EDGE DISTANCE EXCLUDES STUCCO, FOAM, BRICK, AND OTHER WALL FINISHES.
4. ANCHOR SCHEDULE APPLIES TO ALL PRODUCTS CERTIFIED HEREIN, BUT ONLY PROVIDES MAXIMUM ALLOWABLE ANCHOR SPACING. MAXIMUM ALLOWABLE SPANS AND PRESSURES INDICATED IN SPAN SCHEDULE SHALL APPLY.
5. WHERE EXISTING STRUCTURE IS WOOD FRAMING, EXISTING CONDITIONS MAY VARY. FIELD VERIFY THAT FASTENERS ARE INTO ADEQUATE WOOD FRAMING MEMBERS, NOT INTO PLYWOOD.
6. SHEET METAL SCREWS SHALL BE INSTALLED WITH FULL ENGAGEMENT OF THREADS INTO METAL HOST STRUCTURE.

08/11/2017 - 9:59am rickn V:\Projects\14-1323 Magnum III (Security Star) Slat Shutter Florida Product Approval-I.SWP\2017 FBC Update\14-1323a-Dwg-FL17344.1.dwg

ANCHOR SCHEDULE: : INDICATES VALUES NOT APPROVED FOR USE.

WALL MOUNT: MAGNUM 3.57 END RETENTION SHUTTER WITH SINGLE WALL SLATS

ANCHOR NOTES: SEE SHEET 5 FOR ANCHOR NOTES.

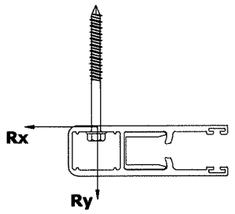

MAXIMUM SPACING (O.C.)

SLAT SPAN	DESIGN PRESSURE	Rx	Ry	1/4" ELCO ULTRACON TO 2846 PSI MIN. CONCRETE; 1.75" MIN. EMBEDMENT; 2.5" MIN. EDGE DISTANCE	1/4" SS ITW TAPCON TO 3192 PSI MIN. CONCRETE; 1.75" MIN. EMBEDMENT; 2.5" MIN. EDGE DISTANCE	5/16" ITW TAPCON: TO 2899 PSI MIN. CONCRETE; 2.25" MIN. EMBEDMENT; 3.125" MIN. EDGE DISTANCE	5/16" ITW TAPCON: TO GROUT-FILLED CONCRETE BLOCK; 2.25" MIN. EMBEDMENT; 4" MIN. EDGE DISTANCE	5/16" ITW TAPCON: TO HOLLOW CONCRETE BLOCK; 1.75" MIN. EMBEDMENT; 4" MIN. EDGE DISTANCE	1/4" POWERS POWER-BOLT TO 3000 PSI MIN. CONCRETE; 2.5" MIN. EMBEDMENT; 3" MIN. EDGE DISTANCE	1/4" ALL-POINTS SOLID-SET: TO 3000 PSI MIN. CONCRETE; 0.875" MIN. EMBEDMENT; 3" MIN. EDGE DISTANCE	1/4" ALL-POINTS SOLID-SET: TO HOLLOW BLOCK; 0.875" MIN. EMBEDMENT; 3" MIN. EDGE DISTANCE	1/4" LAG SCREW TO G=0.55 MIN WOOD; 1.5" MIN. EMBEDMENT; 0.75" MIN. EDGE DISTANCE	5/16" LAG SCREW TO G=0.42 MIN WOOD; 2" MIN. EMBEDMENT; 0.75" MIN. EDGE DISTANCE	#14 WOOD SCREW TO G=0.55 MIN WOOD; 1.5" MIN. EMBEDMENT; 0.75" MIN. EDGE DISTANCE	#14 316 SS SMS W/ FULL THREAD PENETRATION (OR 1/4-20 316 SS THRU-BOLT) W/ 5/8" WASHER TO 0.125" MIN. 6063-T5 ALUM; 0.5" MIN. EDGE DISTANCE	#14 316 SS SMS W/ FULL THREAD PENETRATION (OR 1/4-20 316 SS THRU-BOLT) W/ 5/8" WASHER TO 0.25" MIN. 6063-T5 ALUM; 0.5" MIN. EDGE DISTANCE	3/8" POWERS WEDGE BOLT TO 3000 PSI MIN. CONCRETE; 3.5" MIN. EMBEDMENT; 4.5" MIN. EDGE DISTANCE	#14 316 SS SMS W/ FULL THREAD PENETRATION (OR 1/4-20 316 SS THRU-BOLT) W/ 5/8" WASHER TO 0.125" MIN. A36 STEEL; 0.5" MIN. EDGE DISTANCE	#14 316 SS SMS W/ FULL THREAD PENETRATION (OR 1/4-20 316 SS THRU-BOLT) W/ 5/8" WASHER TO 0.1875" MIN. A36 STEEL; 0.5" MIN. EDGE DISTANCE	#14 316 SS SMS W/ FULL THREAD PENETRATION (OR 1/4-20 316 SS THRU-BOLT) W/ 5/8" WASHER TO 0.25" MIN. A36 STEEL; 0.5" MIN. EDGE DISTANCE	#14 3[illegible] SMS W/ THR[illegible] PENETR[illegible] (OR 1/[illegible] 316 THRU-[illegible] W/ 5 WASHE[illegible] 0.5" MI[illegible] STE[illegible] 0.5" [illegible] EDG[illegible] DISTA[illegible]
48"	+/- 40 PSF	0.0 LB/FT	80.0 LB/FT	4.0"	4.0"	4.0"	4.0"	4.0"	4.0"	4.0"	4.0"	4.0"	4.0"	4.0"	4.0"	4.0"	4.0"	4.0"	4.0"	4.0"	4.0
	+/- 50 PSF	0.0 LB/FT	100.0 LB/FT	4.0"	4.0"	4.0"	4.0"	4.0"	4.0"	4.0"	4.0"	4.0"	4.0"	4.0"	4.0"	4.0"	4.0"	4.0"	4.0"	4.0"	4.0
	+/- 60 PSF	0.0 LB/FT	120.0 LB/FT	4.0"	4.0"	4.0"	4.0"	4.0"	4.0"	4.0"	4.0"	4.0"	4.0"	4.0"	4.0"	4.0"	4.0"	4.0"	4.0"	4.0"	4.0
	+/- 70 PSF	0.0 LB/FT	140.0 LB/FT	4.0"	4.0"	4.0"	4.0"	4.0"	4.0"	4.0"	4.0"	4.0"	4.0"	4.0"	4.0"	4.0"	4.0"	4.0"	4.0"	4.0"	4.0
	+/- 80 PSF	0.0 LB/FT	160.0 LB/FT	4.0"	4.0"	4.0"	4.0"	4.0"	4.0"	4.0"	4.0"	4.0"	4.0"	4.0"	4.0"	4.0"	4.0"	4.0"	4.0"	4.0"	4.0
	+/- 90 PSF	0.0 LB/FT	180.0 LB/FT	4.0"	4.0"	4.0"	4.0"	4.0"	4.0"	4.0"	4.0"	4.0"	4.0"	4.0"	4.0"	4.0"	4.0"	4.0"	4.0"	4.0"	4.0
	+/- 100 PSF	0.0 LB/FT	200.0 LB/FT	4.0"	4.0"	4.0"	4.0"	4.0"	4.0"	4.0"	4.0"	4.0"	4.0"	4.0"	4.0"	4.0"	4.0"	4.0"	4.0"	4.0"	4.0
	+/- 110 PSF	1.2 LB/FT	220.5 LB/FT	4.0"	4.0"	4.0"	4.0"	4.0"	4.0"	4.0"	4.0"	4.0"	4.0"	4.0"	4.0"	4.0"	4.0"	4.0"	4.0"	4.0"	4.0
	+/- 120 PSF	51.9 LB/FT	260.2 LB/FT	4.0"	4.0"	4.0"	4.0"	4.0"	4.0"	4.0"	4.0"	4.0"	4.0"	4.0"	4.0"	4.0"	4.0"	4.0"	4.0"	4.0"	4.0
	+/- 130 PSF	102.5 LB/FT	300.4 LB/FT	4.0"	4.0"	4.0"	4.0"	4.0"	4.0"	4.0"	4.0"	4.0"	4.0"	4.0"	4.0"	4.0"	4.0"	4.0"	4.0"	4.0"	4.0
	+/- 140 PSF	152.9 LB/FT	341.1 LB/FT	4.0"	4.0"	4.0"	4.0"	4.0"	4.0"	4.0"	4.0"	4.0"	4.0"	4.0"	4.0"	4.0"	4.0"	4.0"	4.0"	4.0"	4.0
	+/- 150 PSF	203.0 LB/FT	382.2 LB/FT	4.0"	4.0"	4.0"	4.0"	4.0"	4.0"	4.0"	4.0"	4.0"	4.0"	4.0"	4.0"	4.0"	4.0"	4.0"	4.0"	4.0"	4.0
	+/- 160 PSF	253.0 LB/FT	423.8 LB/FT	4.0"	4.0"	4.0"	4.0"	4.0"	4.0"	4.0"	4.0"	4.0"	4.0"	4.0"	4.0"	4.0"	4.0"	4.0"	4.0"	4.0"	4.0
	+/- 170 PSF	302.8 LB/FT	465.8 LB/FT	4.0"	4.0"	4.0"	4.0"	4.0"	4.0"	4.0"	4.0"	4.0"	4.0"	4.0"	4.0"	4.0"	4.0"	4.0"	4.0"	4.0"	4.0
	+/- 180 PSF	352.5 LB/FT	508.2 LB/FT	4.0"	4.0"	4.0"	4.0"		4.0"	4.0"	4.0"	4.0"	3.8"	4.0"	3.9"	4.0"	4.0"	4.0"	4.0"	4.0"	4.0
	+/- 190 PSF	401.9 LB/FT	551.1 LB/FT	4.0"	4.0"	4.0"	4.0"		4.0"	4.0"	4.0"	3.9"	3.4"	3.8"	3.6"	4.0"	4.0"	4.0"	4.0"	4.0"	4.0
	+/- 206 PSF	480.6 LB/FT	620.6 LB/FT	4.0"	4.0"	4.0"	4.0"		4.0"	4.0"	3.5"	3.3"	2.9"	3.3"	3.1"	4.0"	4.0"	4.0"	4.0"	4.0"	4.0
60"	+/- 40 PSF	0.0 LB/FT	100.0 LB/FT	4.0"	4.0"	4.0"	4.0"	4.0"	4.0"	4.0"	4.0"	4.0"	4.0"	4.0"	4.0"	4.0"	4.0"	4.0"	4.0"	4.0"	4.0
	+/- 50 PSF	0.0 LB/FT	125.0 LB/FT	4.0"	4.0"	4.0"	4.0"	4.0"	4.0"	4.0"	4.0"	4.0"	4.0"	4.0"	4.0"	4.0"	4.0"	4.0"	4.0"	4.0"	4.0
	+/- 60 PSF	68.7 LB/FT	173.8 LB/FT	4.0"	4.0"	4.0"	4.0"	4.0"	4.0"	4.0"	4.0"	4.0"	4.0"	4.0"	4.0"	4.0"	4.0"	4.0"	4.0"	4.0"	4.0
	+/- 70 PSF	140.0 LB/FT	224.0 LB/FT	4.0"	4.0"	4.0"	4.0"	4.0"	4.0"	4.0"	4.0"	4.0"	4.0"	4.0"	4.0"	4.0"	4.0"	4.0"	4.0"	4.0"	4.0
	+/- 80 PSF	211.1 LB/FT	274.8 LB/FT	4.0"	4.0"	4.0"	4.0"	4.0"	4.0"	4.0"	4.0"	4.0"	4.0"	4.0"	4.0"	4.0"	4.0"	4.0"	4.0"	4.0"	4.0
	+/- 90 PSF	282.0 LB/FT	326.0 LB/FT	4.0"	4.0"	4.0"	4.0"	4.0"	4.0"	4.0"	4.0"	4.0"	4.0"	4.0"	4.0"	4.0"	4.0"	4.0"	4.0"	4.0"	4.0
	+/- 100 PSF	352.8 LB/FT	377.7 LB/FT	4.0"	4.0"	4.0"	4.0"	4.0"	4.0"	4.0"	4.0"	4.0"	4.0"	4.0"	4.0"	4.0"	4.0"	4.0"	4.0"	4.0"	4.0
	+/- 110 PSF	423.4 LB/FT	429.9 LB/FT	4.0"	4.0"	4.0"	4.0"	4.0"	4.0"	4.0"	4.0"	4.0"	3.4"	4.0"	4.0"	4.0"	4.0"	4.0"	4.0"	4.0"	4.0
	+/- 120 PSF	493.8 LB/FT	482.6 LB/FT	4.0"	4.0"	4.0"	4.0"		4.0"	4.0"	3.9"	3.4"	3.0"	3.5"	3.8"	4.0"	4.0"	4.0"	4.0"	4.0"	4.0
	+/- 130 PSF	564.0 LB/FT	535.7 LB/FT	4.0"	4.0"	4.0"	4.0"		4.0"	4.0"	3.5"	3.0"	2.6"	3.1"	3.4"	4.0"	4.0"	4.0"	4.0"	4.0"	4.0
	+/- 140 PSF	634.1 LB/FT	589.4 LB/FT	4.0"	4.0"	4.0"	4.0"		4.0"	4.0"	3.1"	2.7"	2.3"	2.7"	3.1"	4.0"	4.0"	4.0"	4.0"	4.0"	4.0
	+/- 150 PSF	703.9 LB/FT	643.5 LB/FT	4.0"	4.0"	4.0"	4.0"		4.0"	4.0"		2.4"	2.1"	2.5"	2.8"	4.0"	4.0"	4.0"	4.0"	4.0"	4.0
72"	+/- 40 PSF	125.9 LB/FT	159.9 LB/FT	4.0"	4.0"	4.0"	4.0"	4.0"	4.0"	4.0"	4.0"	4.0"	4.0"	4.0"	4.0"	4.0"	4.0"	4.0"	4.0"	4.0"	4.0
	+/- 50 PSF	220.0 LB/FT	220.6 LB/FT	4.0"	4.0"	4.0"	4.0"	4.0"	4.0"	4.0"	4.0"	4.0"	4.0"	4.0"	4.0"	4.0"	4.0"	4.0"	4.0"	4.0"	4.0
	+/- 60 PSF	314.0 LB/FT	281.9 LB/FT	4.0"	4.0"	4.0"	4.0"	4.0"	4.0"	4.0"	4.0"	4.0"	4.0"	4.0"	4.0"	4.0"	4.0"	4.0"	4.0"	4.0"	4.0
	+/- 70 PSF	407.7 LB/FT	343.8 LB/FT	4.0"	4.0"	4.0"	4.0"	4.0"	4.0"	4.0"	4.0"	4.0"	3.7"	4.0"	4.0"	4.0"	4.0"	4.0"	4.0"	4.0"	4.0
	+/- 80 PSF	501.2 LB/FT	406.3 LB/FT	4.0"	4.0"	4.0"	4.0"	3.9"	4.0"	4.0"	4.0"	3.5"	3.0"	3.6"	4.0"	4.0"	4.0"	4.0"	4.0"	4.0"	4.0
	+/- 90 PSF	594.6 LB/FT	469.5 LB/FT	4.0"	4.0"	4.0"	4.0"		4.0"	4.0"	3.6"	3.0"	2.6"	3.1"	3.7"	4.0"	4.0"	4.0"	4.0"	4.0"	4.0
	+/- 100 PSF	687.7 LB/FT	533.2 LB/FT	4.0"	4.0"	4.0"	4.0"		4.0"	4.0"	3.1"	2.6"	2.2"	2.7"	3.2"	4.0"	4.0"	4.0"	4.0"	4.0"	4.0
	+/- 110 PSF	780.6 LB/FT	597.5 LB/FT		4.0"	4.0"	4.0"		4.0"	4.0"		2.3"		2.3"	2.9"	4.0"	4.0"	4.0"	4.0"	4.0"	4.0
	+/- 125 PSF	919.5 LB/FT	695.2 LB/FT		3.7"	4.0"	4.0"			4.0"					2.4"	4.0"	4.0"	4.0"	4.0"	4.0"	4.0
84"	+/- 40 PSF	291.3 LB/FT	226.8 LB/FT	4.0"	4.0"	4.0"	4.0"	4.0"	4.0"	4.0"	4.0"	4.0"	4.0"	4.0"	4.0"	4.0"	4.0"	4.0"	4.0"	4.0"	4.0
	+/- 50 PSF	410.1 LB/FT	298.7 LB/FT	4.0"	4.0"	4.0"	4.0"	4.0"	4.0"	4.0"	4.0"	4.0"	3.7"	4.0"	4.0"	4.0"	4.0"	4.0"	4.0"	4.0"	4.0
	+/- 60 PSF	528.7 LB/FT	371.4 LB/FT	4.0"	4.0"	4.0"	4.0"	4.0"	4.0"	4.0"	4.0"	3.4"	2.9"	3.5"	4.0"	4.0"	4.0"	4.0"	4.0"	4.0"	4.0
	+/- 70 PSF	647.0 LB/FT	444.8 LB/FT	4.0"	4.0"	4.0"	4.0"		4.0"	4.0"	3.5"	2.8"	2.4"	2.9"	3.7"	4.0"	4.0"	4.0"	4.0"	4.0"	4.0
	+/- 80 PSF	765.1 LB/FT	519.1 LB/FT	4.0"	4.0"	4.0"	4.0"		4.0"	4.0"		2.4"	2.0"	2.5"	3.2"	4.0"	4.0"	4.0"	4.0"	4.0"	4.0
	+/- 90 PSF	882.9 LB/FT	594.2 LB/FT		4.0"	4.0"	4.0"			4.0"		2.1"		2.1"	2.8"	4.0"	4.0"	4.0"	4.0"	4.0"	4.0
	+/- 112 PSF	1141.1 LB/FT	762.1 LB/FT		3.1"	4.0"	4.0"			3.5"					2.2"	4.0"	4.0"	4.0"	4.0"	4.0"	4.0

08/11/2017 - 9:59am nickn V:\Projects\14-1323 Magnum III (Security Star) Slat Shutter Florida Product Approval-I.SW\P2017 FBC Update\14-1323e-Dwg-FL17344.1.dwg

ANCHOR SCHEDULE: : INDICATES VALUES NOT APPROVED FOR USE.

WALL MOUNT: MAGNUM 3.57 END RETENTION SHUTTER WITH SINGLE WALL SLATS (CONTINUED)

ANCHOR NOTES: SEE SHEET 5 FOR ANCHOR NOTES.

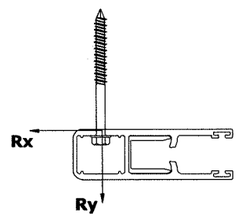

SLAT SPAN	DESIGN PRESSURE	Rx	Ry	MAXIMUM SPACING (O.C.)																
				1/4" ELCO ULTRACON TO 2846 PSI MIN. CONCRETE; 1.75" MIN. EMBEDMENT; 2.5" MIN. EDGE DISTANCE	1/4" SS ITW TAPCON TO 3192 PSI MIN. CONCRETE; 1.75" MIN. EMBEDMENT; 2.5" MIN. EDGE DISTANCE	5/16" ITW TAPCON: TO 2899 PSI MIN. CONCRETE; 2.25" MIN. EMBEDMENT; 3.125" MIN. EDGE DISTANCE	5/16" ITW TAPCON: TO GROUT-FILLED CONCRETE BLOCK; 2.25" MIN. EMBEDMENT; 4" MIN. EDGE DISTANCE	5/16" ITW TAPCON: TO HOLLOW CONCRETE BLOCK; 1.75" MIN. EMBEDMENT; 4" MIN. EDGE DISTANCE	1/4" POWERS POWER-BOLT TO 3000 PSI MIN. CONCRETE; 2.5" MIN. EMBEDMENT; 3" MIN. EDGE DISTANCE	1/4" ALL-POINTS SOLID-SET: TO 3000 PSI MIN. CONCRETE; 0.875" MIN. EMBEDMENT; 3" MIN. EDGE DISTANCE	1/4" ALL-POINTS SOLID-SET: TO HOLLOW BLOCK; 0.875" MIN. EMBEDMENT; 3" MIN. EDGE DISTANCE	1/4" LAG SCREW TO G=0.55 MIN WOOD; 1.5" MIN. EMBEDMENT; 0.75" MIN. EDGE DISTANCE	5/16" LAG SCREW TO G=0.42 MIN WOOD; 2" MIN. EMBEDMENT; 0.75" MIN. EDGE DISTANCE	#14 WOOD SCREW TO G=0.55 MIN WOOD; 1.5" MIN. EMBEDMENT; 0.75" MIN. EDGE DISTANCE	#14 316 SS SMS W/ FULL THREAD PENETRATION (OR 1/4-20 316 SS THRU-BOLT) W/ 5/8" WASHER TO 0.125" MIN. 6063-T5 ALUM; 0.5" MIN. EDGE DISTANCE	#14 316 SS SMS W/ FULL THREAD PENETRATION (OR 1/4-20 316 SS THRU-BOLT) W/ 5/8" WASHER TO 0.25" MIN. 6063-T5 ALUM; 0.5" MIN. EDGE DISTANCE	3/8" POWERS WEDGE BOLT TO 3000 PSI MIN. CONCRETE; 3.5" MIN. EMBEDMENT; 4.5" MIN. EDGE DISTANCE	#14 316 SS SMS W/ FULL THREAD PENETRATION (OR 1/4-20 316 SS THRU-BOLT) W/ 5/8" WASHER TO 0.125" MIN. A36 STEEL; 0.5" MIN. EDGE DISTANCE	#14 316 SS SMS W/ FULL THREAD PENETRATION (OR 1/4-20 316 SS THRU-BOLT) W/ 5/8" WASHER TO 0.1875" MIN. A36 STEEL; 0.5" MIN. EDGE DISTANCE	#14 316 SS SMS W/ FULL THREAD PENETRATION (OR 1/4-20 316 SS THRU-BOLT) W/ 5/8" WASHER TO 0.25" MIN. A36 STEEL; 0.5" MIN. EDGE DISTANCE	#14 3 SMS W THR PENET (OR 316 THRU W/ 5 WASHI 0.5" MI STE 0.5" EDG DISTA
96"	+/- 40 PSF	441.4 LB/FT	284.2 LB/FT	4.0"	4.0"	4.0"	4.0"	4.0"	4.0"	4.0"	4.0"	4.0"	4.0"	3.5"	4.0"	4.0"	4.0"	4.0"	4.0"	4.0"	4.0
	+/- 50 PSF	586.8 LB/FT	367.4 LB/FT	4.0"	4.0"	4.0"	4.0"	3.9"	4.0"	4.0"	4.0"	3.1"	2.7"	3.3"	4.0"	4.0"	4.0"	4.0"	4.0"	4.0"	4.0
	+/- 60 PSF	731.8 LB/FT	451.6 LB/FT	4.0"	4.0"	4.0"	4.0"		4.0"	4.0"	3.2"	2.5"	2.1"	2.6"	3.5"	4.0"	4.0"	4.0"	4.0"	4.0"	4.0
	+/- 70 PSF	876.6 LB/FT	536.8 LB/FT		4.0"	4.0"	4.0"		4.0"	4.0"		2.1"		2.2"	3.0"	4.0"	4.0"	4.0"	4.0"	4.0"	4.0
	+/- 80 PSF	1021.1 LB/FT	623.0 LB/FT		3.6"	4.0"	4.0"			4.0"					2.6"	4.0"	4.0"	4.0"	4.0"	4.0"	4.0
	+/- 90 PSF	1165.2 LB/FT	710.2 LB/FT		3.2"	4.0"	4.0"			3.6"					2.2"	4.0"	4.0"	4.0"	4.0"	4.0"	4.0
	+/- 104 PSF	1366.5 LB/FT	834.0 LB/FT			4.0"				3.0"						3.6"	4.0"	4.0"	4.0"	4.0"	4.0
108"	+/- 40 PSF	585.0 LB/FT	336.6 LB/FT	4.0"	4.0"	4.0"	4.0"	4.0"	4.0"	4.0"	4.0"	3.2"	2.7"	3.3"	4.0"	4.0"	4.0"	4.0"	4.0"	4.0"	4.0
	+/- 50 PSF	758.7 LB/FT	431.2 LB/FT	4.0"	4.0"	4.0"	4.0"		4.0"	4.0"	3.2"	2.5"	2.1"	2.6"	3.6"	4.0"	4.0"	4.0"	4.0"	4.0"	4.0
	+/- 60 PSF	932.1 LB/FT	527.0 LB/FT		4.0"	4.0"	4.0"			4.0"				2.1"	2.9"	4.0"	4.0"	4.0"	4.0"	4.0"	4.0
	+/- 70 PSF	1105.1 LB/FT	624.1 LB/FT		3.4"	4.0"	4.0"			3.9"					2.5"	4.0"	4.0"	4.0"	4.0"	4.0"	4.0
	+/- 80 PSF	1277.7 LB/FT	722.5 LB/FT			4.0"	4.0"			3.3"					2.1"	4.0"	4.0"	4.0"	4.0"	4.0"	4.0
	+/- 90 PSF	1449.9 LB/FT	822.1 LB/FT			4.0"										3.5"	4.0"	4.0"	4.0"	4.0"	4.0
	+/- 98 PSF	1587.4 LB/FT	902.7 LB/FT			4.0"										3.2"	4.0"	4.0"	4.0"	4.0"	4.0
120"	+/- 30 PSF	522.8 LB/FT	281.7 LB/FT	4.0"	4.0"	4.0"	4.0"	4.0"	4.0"	4.0"	4.0"	3.6"	3.1"	3.8"	4.0"	4.0"	4.0"	4.0"	4.0"	4.0"	4.0
	+/- 40 PSF	726.9 LB/FT	386.2 LB/FT	4.0"	4.0"	4.0"	4.0"		4.0"	4.0"	3.4"	2.6"	2.2"	2.7"	3.9"	4.0"	4.0"	4.0"	4.0"	4.0"	4.0
	+/- 50 PSF	930.6 LB/FT	492.2 LB/FT		4.0"	4.0"	4.0"		4.0"	4.0"		2.0"		2.1"	3.1"	4.0"	4.0"	4.0"	4.0"	4.0"	4.0
	+/- 60 PSF	1133.8 LB/FT	599.9 LB/FT		3.4"	4.0"	4.0"			3.9"					2.5"	4.0"	4.0"	4.0"	4.0"	4.0"	4.0
	+/- 70 PSF	1336.6 LB/FT	709.1 LB/FT			4.0"	3.9"			3.3"					2.1"	3.9"	4.0"	4.0"	4.0"	4.0"	4.0
	+/- 80 PSF	1539.0 LB/FT	820.0 LB/FT			4.0"										3.4"	4.0"	4.0"	4.0"	4.0"	4.0
	+/- 90 PSF	1740.9 LB/FT	932.4 LB/FT													3.0"	4.0"	4.0"	4.0"	4.0"	4.0
	+/- 93 PSF	1801.4 LB/FT	966.4 LB/FT													2.9"	4.0"	4.0"	4.0"	4.0"	4.0
132"	+/- 30 PSF	633.9 LB/FT	318.2 LB/FT	4.0"	4.0"	4.0"	4.0"	4.0"	4.0"	4.0"	4.0"	3.0"	2.5"	3.1"	4.0"	4.0"	4.0"	4.0"	4.0"	4.0"	4.0
	+/- 40 PSF	869.6 LB/FT	434.0 LB/FT	4.0"	4.0"	4.0"	4.0"		4.0"	4.0"		2.2"		2.3"	3.4"	4.0"	4.0"	4.0"	4.0"	4.0"	4.0
	+/- 50 PSF	1104.8 LB/FT	551.8 LB/FT		3.6"	4.0"	4.0"			4.0"					2.7"	4.0"	4.0"	4.0"	4.0"	4.0"	4.0
	+/- 60 PSF	1338.3 LB/FT	676.1 LB/FT			4.0"	4.0"			3.3"					2.2"	3.9"	4.0"	4.0"	4.0"	4.0"	4.0
	+/- 70 PSF	1573.6 LB/FT	793.2 LB/FT			4.0"										3.4"	4.0"	4.0"	4.0"	4.0"	4.0
	+/- 80 PSF	1805.1 LB/FT	925.1 LB/FT													2.9"	4.0"	4.0"	4.0"	4.0"	4.0
	+/- 90 PSF	2040.4 LB/FT	1042.4 LB/FT													2.6"	4.0"	4.0"	4.0"	4.0"	4.0
144"	+/- 20 PSF	476.3 LB/FT	228.7 LB/FT	4.0"	4.0"	4.0"	4.0"	4.0"	4.0"	4.0"	4.0"	4.0"	3.4"	4.0"	4.0"	4.0"	4.0"	4.0"	4.0"	4.0"	4.0
	+/- 30 PSF	745.6 LB/FT	353.6 LB/FT	4.0"	4.0"	4.0"	4.0"		4.0"	4.0"	3.5"	2.6"	2.2"	2.7"	4.0"	4.0"	4.0"	4.0"	4.0"	4.0"	4.0
	+/- 40 PSF	1014.4 LB/FT	481.0 LB/FT		4.0"	4.0"	4.0"			4.0"					3.0"	4.0"	4.0"	4.0"	4.0"	4.0"	4.0
	+/- 50 PSF	1282.6 LB/FT	610.7 LB/FT		3.1"	4.0"	4.0"			3.5"					2.4"	4.0"	4.0"	4.0"	4.0"	4.0"	4.0
	+/- 60 PSF	1547.4 LB/FT	754.0 LB/FT			4.0"										3.5"	4.0"	4.0"	4.0"	4.0"	4.0
	+/- 70 PSF	1817.2 LB/FT	877.1 LB/FT													2.9"	4.0"	4.0"	4.0"	4.0"	4.0
	+/- 86 PSF	2243.0 LB/FT	1097.0 LB/FT													2.4"	4.0"	4.0"	4.0"	4.0"	4.0
156"	+/- 20 PSF	555.0 LB/FT	252.7 LB/FT	4.0"	4.0"	4.0"	4.0"	4.0"	4.0"	4.0"	4.0"	3.4"	2.9"	3.6"	4.0"	4.0"	4.0"	4.0"	4.0"	4.0"	4.0
	+/- 30 PSF	858.8 LB/FT	389.5 LB/FT	4.0"	4.0"	4.0"	4.0"		4.0"	4.0"	3.0"	2.2"		2.4"	3.7"	4.0"	4.0"	4.0"	4.0"	4.0"	4.0
	+/- 40 PSF	1161.8 LB/FT	529.4 LB/FT		3.5"	4.0"	4.0"			4.0"					2.7"	4.0"	4.0"	4.0"	4.0"	4.0"	4.0
	+/- 50 PSF	1464.1 LB/FT	672.4 LB/FT			4.0"				3.1"					2.1"	3.7"	4.0"	4.0"	4.0"	4.0"	4.0
	+/- 60 PSF	1761.7 LB/FT	834.4 LB/FT			3.8"										3.1"	4.0"	4.0"	4.0"	4.0"	4.0
	+/- 70 PSF	2066.4 LB/FT	967.6 LB/FT													2.6"	4.0"	4.0"	4.0"	4.0"	4.0
	+/- 78 PSF	2306.4 LB/FT	1089.0 LB/FT													2.3"	4.0"	4.0"	4.0"	4.0"	4.0
168"	+/- 20 PSF	634.5 LB/FT	276.4 LB/FT	4.0"	4.0"	4.0"	4.0"	4.0"	4.0"	4.0"	4.0"	3.0"	2.6"	3.2"	4.0"	4.0"	4.0"	4.0"	4.0"	4.0"	4.0
	+/- 30 PSF	974.0 LB/FT	425.4 LB/FT		4.0"	4.0"	4.0"		4.0"	4.0"				2.1"	3.3"	4.0"	4.0"	4.0"	4.0"	4.0"	4.0
	+/- 40 PSF	1312.7 LB/FT	578.4 LB/FT		3.1"	4.0"	4.0"			3.5"					2.4"	4.0"	4.0"	4.0"	4.0"	4.0"	4.0
	+/- 50 PSF	1650.3 LB/FT	735.3 LB/FT			4.0"										3.3"	4.0"	4.0"	4.0"	4.0"	4.0
	+/- 60 PSF	1981.6 LB/FT	918.0 LB/FT													2.7"	4.0"	4.0"	4.0"	4.0"	4.0
	+/- 72 PSF	2389.7 LB/FT	1094.2 LB/FT													2.3"	4.0"	4.0"	4.0"	4.0"	4.0

V:\Projects\14-1323 Magnum III (Security Star) Slat Shutter Florida Product Approval-I.SWP\2017 FBC Update\14-1323e-Dwg-FL17344.1.dwg
rickn
08/11/2017 - 9:59am

ANCHOR SCHEDULE: : INDICATES VALUES NOT APPROVED FOR USE.

WALL MOUNT: MAGNUM 3.57 END RETENTION SHUTTER WITH SINGLE WALL SLATS (CONTINUED)

ANCHOR NOTES: SEE SHEET 5 FOR ANCHOR NOTES.

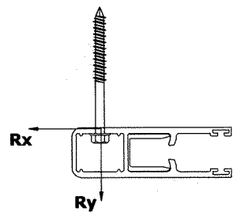

SLAT SPAN	DESIGN PRESSURE	Rx	Ry	MAXIMUM SPACING (O.C.): 1/4" ELCO ULTRACON TO 2846 PSI MIN. CONCRETE; 1.75" MIN. EMBEDMENT; 2.5" MIN. EDGE DISTANCE	1/4" SS ITW TAPCON TO 3192 PSI MIN. CONCRETE; 1.75" MIN. EMBEDMENT; 2.5" MIN. EDGE DISTANCE	5/16" ITW TAPCON: TO 2899 PSI MIN. CONCRETE; 2.25" MIN. EMBEDMENT; 3.125" MIN. EDGE DISTANCE	5/16" ITW TAPCON: TO GROUT-FILLED CONCRETE BLOCK; 2.25" MIN. EMBEDMENT; 4" MIN. EDGE DISTANCE	TO HOLLOW CONCRETE BLOCK; 1.75" MIN. EMBEDMENT; 4" MIN. EDGE DISTANCE	1/4" POWERS POWER-BOLT TO 3000 PSI MIN. CONCRETE; 2.5" MIN. EMBEDMENT; 3" MIN. EDGE DISTANCE	1/4" ALL-POINTS SOLID-SET: TO 3000 PSI MIN. CONCRETE; 0.875" MIN. EMBEDMENT; 3" MIN. EDGE DISTANCE	1/4" ALL-POINTS SOLID-SET: TO HOLLOW BLOCK; 0.875" MIN. EMBEDMENT; 3" MIN. EDGE DISTANCE	1/4" LAG SCREW TO G=0.55 MIN WOOD; 1.5" MIN. EMBEDMENT; 0.75" MIN. EDGE DISTANCE	5/16" LAG SCREW TO G=0.42 MIN WOOD; 2" MIN. EMBEDMENT; 0.75" MIN. EDGE DISTANCE	#14 WOOD SCREW TO G=0.55 MIN WOOD; 1.5" MIN. EMBEDMENT; 0.75" MIN. EDGE DISTANCE	#14 316 SS SMS W/ FULL THREAD PENETRATION (OR 1/4-20 316 SS THRU-BOLT) W/ 5/8" WASHER TO 0.125" MIN. 6063-T5 ALUM; 0.5" MIN. EDGE DISTANCE	#14 316 SS SMS W/ FULL THREAD PENETRATION (OR 1/4-20 316 SS THRU-BOLT) W/ 5/8" WASHER TO 0.25" MIN. 6063-T5 ALUM; 0.5" MIN. EDGE DISTANCE	3/8" POWERS WEDGE BOLT TO 3000 PSI MIN. CONCRETE; 3.5" MIN. EMBEDMENT; 4.5" MIN. EDGE DISTANCE	#14 316 SS SMS W/ FULL THREAD PENETRATION (OR 1/4-20 316 SS THRU-BOLT) W/ 5/8" WASHER TO 0.125" MIN. A36 STEEL; 0.5" MIN. EDGE DISTANCE	#14 316 SS SMS W/ FULL THREAD PENETRATION (OR 1/4-20 316 SS THRU-BOLT) W/ 5/8" WASHER TO 0.1875" MIN. A36 STEEL; 0.5" MIN. EDGE DISTANCE	#14 316 SS SMS W/ FULL THREAD PENETRATION (OR 1/4-20 316 SS THRU-BOLT) W/ 5/8" WASHER TO 0.25" MIN. A36 STEEL; 0.5" MIN. EDGE DISTANCE	#14 3 SMS W THR PENETI (OR 1 3/8 THRU W/ WASH 0.5" MI STE 0.5" ED DIST
180"	+/- 20 PSF	715.2 LB/FT	300.0 LB/FT	4.0"	4.0"	4.0"	4.0"	4.0"	4.0"	4.0"	3.7"	2.7"	2.3"	2.9"	4.0"	4.0"	4.0"	4.0"	4.0"	4.0"	4.
	+/- 30 PSF	1091.7 LB/FT	461.6 LB/FT		3.8"	4.0"	4.0"			4.0"					3.0"	4.0"	4.0"	4.0"	4.0"	4.0"	4.
	+/- 40 PSF	1467.1 LB/FT	628.1 LB/FT			4.0"	3.8"			3.2"					2.2"	3.8"	4.0"	4.0"	4.0"	4.0"	4.
	+/- 50 PSF	1841.4 LB/FT	799.6 LB/FT			3.8"										3.0"	4.0"	4.0"	4.0"	4.0"	4.
	+/- 67 PSF	2474.8 LB/FT	1102.4 LB/FT													2.2"	4.0"	4.0"	4.0"	4.0"	4.
192"	+/- 10 PSF	381.2 LB/FT	155.3 LB/FT	4.0"	4.0"	4.0"	4.0"	4.0"	4.0"	4.0"	4.0"	4.0"	4.0"	4.0"	4.0"	4.0"	4.0"	4.0"	4.0"	4.0"	4.
	+/- 20 PSF	797.3 LB/FT	323.6 LB/FT	4.0"	4.0"	4.0"	4.0"		4.0"	4.0"	3.4"	2.4"	2.1"	2.6"	4.0"	4.0"	4.0"	4.0"	4.0"	4.0"	4.
	+/- 30 PSF	1212.0 LB/FT	498.2 LB/FT		3.4"	4.0"	4.0"			3.9"					2.7"	4.0"	4.0"	4.0"	4.0"	4.0"	4.
	+/- 40 PSF	1625.4 LB/FT	678.9 LB/FT			4.0"									2.0"	3.4"	4.0"	4.0"	4.0"	4.0"	4.
	+/- 50 PSF	2037.4 LB/FT	865.7 LB/FT													2.7"	4.0"	4.0"	4.0"	4.0"	4.
	+/- 62 PSF	2529.7 LB/FT	1097.9 LB/FT													2.2"	4.0"	4.0"	4.0"	4.0"	4.
204"	+/- 10 PSF	425.2 LB/FT	166.9 LB/FT	4.0"	4.0"	4.0"	4.0"	4.0"	4.0"	4.0"	4.0"	4.0"	3.9"	4.0"	4.0"	4.0"	4.0"	4.0"	4.0"	4.0"	4.
	+/- 20 PSF	880.9 LB/FT	347.3 LB/FT	4.0"	4.0"	4.0"	4.0"		4.0"	4.0"	3.1"	2.2"		2.3"	3.9"	4.0"	4.0"	4.0"	4.0"	4.0"	4.
	+/- 30 PSF	1335.1 LB/FT	535.3 LB/FT		3.2"	4.0"	4.0"			3.6"					2.5"	4.0"	4.0"	4.0"	4.0"	4.0"	4.
	+/- 40 PSF	1787.6 LB/FT	730.8 LB/FT			4.0"										3.1"	4.0"	4.0"	4.0"	4.0"	4.
	+/- 50 PSF	2238.3 LB/FT	933.8 LB/FT													2.5"	4.0"	4.0"	4.0"	4.0"	4.
	+/- 58 PSF	2597.6 LB/FT	1101.4 LB/FT													2.1"	4.0"	4.0"	4.0"	4.0"	4.
216"	+/- 10 PSF	469.7 LB/FT	178.5 LB/FT	4.0"	4.0"	4.0"	4.0"	4.0"	4.0"	4.0"	4.0"	4.0"	3.5"	4.0"	4.0"	4.0"	4.0"	4.0"	4.0"	4.0"	4.
	+/- 20 PSF	966.3 LB/FT	371.3 LB/FT	4.0"	4.0"	4.0"	4.0"		4.0"	4.0"		2.0"		2.1"	3.6"	4.0"	4.0"	4.0"	4.0"	4.0"	4.
	+/- 30 PSF	1461.0 LB/FT	573.2 LB/FT			4.0"	3.9"			3.3"					2.3"	3.9"	4.0"	4.0"	4.0"	4.0"	4.
	+/- 40 PSF	1953.7 LB/FT	784.1 LB/FT													2.9"	4.0"	4.0"	4.0"	4.0"	4.
	+/- 50 PSF	2444.2 LB/FT	1004.0 LB/FT													2.3"	4.0"	4.0"	4.0"	4.0"	4.
	+/- 55 PSF	2688.7 LB/FT	1117.3 LB/FT													2.1"	4.0"	4.0"	4.0"	4.0"	4.

08/11/2017 - 9:59am rickn V:\Projects\14-1323 Magnum III (Security Star) Slat Shutter Florida Product Approval-I.SWP\2017 FBC Update\14-1323e-Dwg-FL17344.1.dwg

ANCHOR SCHEDULE: : INDICATES VALUES NOT APPROVED FOR USE.

BUILD-OUT MOUNT: MAGNUM 3.57 END RETENTION SHUTTER WITH SINGLE WALL SLATS

ANCHOR NOTES: SEE SHEET 5 FOR ANCHOR NOTES.

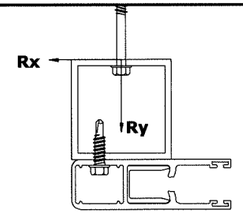

MAXIMUM SPACING (O.C.)

SLAT SPAN	DESIGN PRESSURE	Rx	Ry	1/4" ELCO ULTRACON TO 2846 PSI MIN. CONCRETE; 1.75" MIN. EMBEDMENT; 2.5" MIN. EDGE DISTANCE	1/4" SS ITW TAPCON TO 3192 PSI MIN. CONCRETE; 1.75" MIN. EMBEDMENT; 2.5" MIN. EDGE DISTANCE	5/16" ITW TAPCON: TO 2899 PSI MIN. CONCRETE; 2.25" MIN. EMBEDMENT; 3.125" MIN. EDGE DISTANCE	5/16" ITW TAPCON: TO GROUT-FILLED CONCRETE BLOCK; 2.25" MIN. EMBEDMENT; 4" MIN. EDGE DISTANCE	5/16" ITW TAPCON: TO HOLLOW CONCRETE BLOCK; 1.75" MIN. EMBEDMENT; 4" MIN. EDGE DISTANCE	1/4" POWERS POWER-BOLT TO 3000 PSI MIN. CONCRETE; 2.5" MIN. EMBEDMENT; 3" MIN. EDGE DISTANCE	1/4" ALL-POINTS SOLID-SET: TO 3000 PSI MIN. CONCRETE; 0.875" MIN. EMBEDMENT; 3" MIN. EDGE DISTANCE	1/4" ALL-POINTS SOLID-SET: TO HOLLOW BLOCK; 0.875" MIN. EMBEDMENT; 3" MIN. EDGE DISTANCE	1/4" LAG SCREW TO G=0.55 MIN WOOD; 1.5" MIN. EMBEDMENT; 0.75" MIN. EDGE DISTANCE	5/16" LAG SCREW TO G=0.42 MIN WOOD; 2" MIN. EMBEDMENT; 0.75" MIN. EDGE DISTANCE	#14 WOOD SCREW TO G=0.55 MIN WOOD; 1.5" MIN. EMBEDMENT; 0.75" MIN. EDGE DISTANCE	#14 316 SS SMS W/ FULL THREAD PENETRATION (OR 1/4-20 316 SS THRU-BOLT) W/ 5/8" WASHER TO 0.125" MIN. 6063-T5 ALUM; 0.5" MIN. EDGE DISTANCE	#14 316 SS SMS W/ FULL THREAD PENETRATION (OR 1/4-20 316 SS THRU-BOLT) W/ 5/8" WASHER TO 0.25" MIN. 6063-T5 ALUM; 0.5" MIN. EDGE DISTANCE	3/8" POWERS WEDGE BOLT TO 3000 PSI MIN. CONCRETE; 3.5" MIN. EMBEDMENT; 4.5" MIN. EDGE DISTANCE	#14 316 SS SMS W/ FULL THREAD PENETRATION (OR 1/4-20 316 SS THRU-BOLT) W/ 5/8" WASHER TO 0.125" MIN. A36 STEEL; 0.5" MIN. EDGE DISTANCE	#14 316 SS SMS W/ FULL THREAD PENETRATION (OR 1/4-20 316 SS THRU-BOLT) W/ 5/8" WASHER TO 0.1875" MIN. A36 STEEL; 0.5" MIN. EDGE DISTANCE	#14 316 SS SMS W/ FULL THREAD PENETRATION (OR 1/4-20 316 SS THRU-BOLT) W/ 5/8" WASHER TO 0.25" MIN. A36 STEEL; 0.5" MIN. EDGE DISTANCE	#14 316 SMS W/ THRE PENETRA (OR 1/4 316 S THRU-B W/ 5/ WASHE 0.5" MIN STEE 0.5" M EDG DISTAN
48"	+/- 40 PSF	0.0 LB/FT	133.4 LB/FT	4.0"	4.0"	4.0"	4.0"	4.0"	4.0"	4.0"	4.0"	4.0"	4.0"	4.0"	4.0"	4.0"	4.0"	4.0"	4.0"	4.0"	4.0
	+/- 50 PSF	0.0 LB/FT	166.7 LB/FT	4.0"	4.0"	4.0"	4.0"	4.0"	4.0"	4.0"	4.0"	4.0"	4.0"	4.0"	4.0"	4.0"	4.0"	4.0"	4.0"	4.0"	4.0
	+/- 60 PSF	0.0 LB/FT	200.0 LB/FT	4.0"	4.0"	4.0"	4.0"	4.0"	4.0"	4.0"	4.0"	4.0"	4.0"	4.0"	4.0"	4.0"	4.0"	4.0"	4.0"	4.0"	4.0
	+/- 70 PSF	0.0 LB/FT	233.4 LB/FT	4.0"	4.0"	4.0"	4.0"	4.0"	4.0"	4.0"	4.0"	4.0"	4.0"	4.0"	4.0"	4.0"	4.0"	4.0"	4.0"	4.0"	4.0
	+/- 80 PSF	0.0 LB/FT	266.7 LB/FT	4.0"	4.0"	4.0"	4.0"	4.0"	4.0"	4.0"	4.0"	4.0"	4.0"	4.0"	4.0"	4.0"	4.0"	4.0"	4.0"	4.0"	4.0
	+/- 90 PSF	0.0 LB/FT	300.1 LB/FT	4.0"	4.0"	4.0"	4.0"	4.0"	4.0"	4.0"	4.0"	4.0"	4.0"	4.0"	4.0"	4.0"	4.0"	4.0"	4.0"	4.0"	4.0
	+/- 100 PSF	0.0 LB/FT	333.4 LB/FT	4.0"	4.0"	4.0"	4.0"	4.0"	4.0"	4.0"	4.0"	4.0"	4.0"	4.0"	4.0"	4.0"	4.0"	4.0"	4.0"	4.0"	4.0
	+/- 110 PSF	1.2 LB/FT	367.5 LB/FT	4.0"	4.0"	4.0"	4.0"	4.0"	4.0"	4.0"	4.0"	4.0"	4.0"	4.0"	4.0"	4.0"	4.0"	4.0"	4.0"	4.0"	4.0
	+/- 120 PSF	51.9 LB/FT	433.8 LB/FT	4.0"	4.0"	4.0"	4.0"	4.0"	4.0"	4.0"	4.0"	4.0"	4.0"	4.0"	4.0"	4.0"	4.0"	4.0"	4.0"	4.0"	4.0
	+/- 130 PSF	102.5 LB/FT	500.8 LB/FT	4.0"	4.0"	4.0"	4.0"	4.0"	4.0"	4.0"	4.0"	4.0"	4.0"	4.0"	4.0"	4.0"	4.0"	4.0"	4.0"	4.0"	4.0
	+/- 140 PSF	152.9 LB/FT	568.6 LB/FT	4.0"	4.0"	4.0"	4.0"	3.9"	4.0"	4.0"	4.0"	4.0"	4.0"	4.0"	3.9"	4.0"	4.0"	4.0"	4.0"	4.0"	4.0
	+/- 150 PSF	203.0 LB/FT	637.2 LB/FT	4.0"	4.0"	4.0"	4.0"		4.0"	4.0"	4.0"	4.0"	4.0"	4.0"	3.4"	4.0"	4.0"	4.0"	4.0"	4.0"	4.0
	+/- 160 PSF	253.0 LB/FT	706.5 LB/FT	4.0"	4.0"	4.0"	4.0"		4.0"	4.0"	4.0"	4.0"	4.0"	4.0"	3.1"	4.0"	4.0"	4.0"	4.0"	4.0"	4.0
	+/- 170 PSF	302.8 LB/FT	776.5 LB/FT	4.0"	4.0"	4.0"	4.0"		4.0"	4.0"	3.5"	4.0"	3.7"	3.9"	2.8"	4.0"	4.0"	4.0"	4.0"	4.0"	4.0
	+/- 180 PSF	352.5 LB/FT	847.2 LB/FT	4.0"	4.0"	4.0"	4.0"		4.0"	4.0"	3.2"	3.6"	3.3"	3.5"	2.5"	4.0"	4.0"	4.0"	4.0"	4.0"	4.0
	+/- 190 PSF	401.9 LB/FT	918.7 LB/FT	4.0"	4.0"	4.0"	4.0"			4.0"		3.2"	2.9"	3.1"	2.3"	4.0"	4.0"	4.0"	4.0"	4.0"	4.0
	+/- 206 PSF	480.6 LB/FT	1034.6 LB/FT		4.0"	4.0"	4.0"			4.0"		2.8"	2.5"	2.7"	2.0"	4.0"	4.0"	4.0"	4.0"	4.0"	4.0
60"	+/- 40 PSF	0.0 LB/FT	166.7 LB/FT	4.0"	4.0"	4.0"	4.0"	4.0"	4.0"	4.0"	4.0"	4.0"	4.0"	4.0"	4.0"	4.0"	4.0"	4.0"	4.0"	4.0"	4.0
	+/- 50 PSF	0.0 LB/FT	208.4 LB/FT	4.0"	4.0"	4.0"	4.0"	4.0"	4.0"	4.0"	4.0"	4.0"	4.0"	4.0"	4.0"	4.0"	4.0"	4.0"	4.0"	4.0"	4.0
	+/- 60 PSF	68.7 LB/FT	289.7 LB/FT	4.0"	4.0"	4.0"	4.0"	4.0"	4.0"	4.0"	4.0"	4.0"	4.0"	4.0"	4.0"	4.0"	4.0"	4.0"	4.0"	4.0"	4.0
	+/- 70 PSF	140.0 LB/FT	373.5 LB/FT	4.0"	4.0"	4.0"	4.0"	4.0"	4.0"	4.0"	4.0"	4.0"	4.0"	4.0"	4.0"	4.0"	4.0"	4.0"	4.0"	4.0"	4.0
	+/- 80 PSF	211.1 LB/FT	458.0 LB/FT	4.0"	4.0"	4.0"	4.0"	4.0"	4.0"	4.0"	4.0"	4.0"	4.0"	4.0"	4.0"	4.0"	4.0"	4.0"	4.0"	4.0"	4.0
	+/- 90 PSF	282.0 LB/FT	543.4 LB/FT	4.0"	4.0"	4.0"	4.0"		4.0"	4.0"	4.0"	4.0"	4.0"	4.0"	3.8"	4.0"	4.0"	4.0"	4.0"	4.0"	4.0
	+/- 100 PSF	352.8 LB/FT	629.6 LB/FT	4.0"	4.0"	4.0"	4.0"		4.0"	4.0"	3.9"	4.0"	3.6"	4.0"	3.2"	4.0"	4.0"	4.0"	4.0"	4.0"	4.0
	+/- 110 PSF	423.4 LB/FT	716.6 LB/FT	4.0"	4.0"	4.0"	4.0"		4.0"	4.0"	3.3"	3.4"	3.1"	3.4"	2.8"	4.0"	4.0"	4.0"	4.0"	4.0"	4.0
	+/- 120 PSF	493.8 LB/FT	804.5 LB/FT	4.0"	4.0"	4.0"	4.0"		4.0"	4.0"		3.0"	2.6"	2.9"	2.5"	4.0"	4.0"	4.0"	4.0"	4.0"	4.0
	+/- 130 PSF	564.0 LB/FT	893.1 LB/FT		4.0"	4.0"	4.0"			4.0"		2.6"	2.3"	2.6"	2.2"	4.0"	4.0"	4.0"	4.0"	4.0"	4.0
	+/- 140 PSF	634.1 LB/FT	982.5 LB/FT		3.8"	4.0"	4.0"			4.0"		2.4"	2.1"	2.3"	2.0"	4.0"	4.0"	4.0"	4.0"	4.0"	4.0
	+/- 150 PSF	703.9 LB/FT	1072.6 LB/FT		3.5"	4.0"	4.0"			3.7"		2.1"		2.1"		4.0"	4.0"	4.0"	4.0"	4.0"	4.0
72"	+/- 40 PSF	125.9 LB/FT	266.6 LB/FT	4.0"	4.0"	4.0"	4.0"	4.0"	4.0"	4.0"	4.0"	4.0"	4.0"	4.0"	4.0"	4.0"	4.0"	4.0"	4.0"	4.0"	4.0
	+/- 50 PSF	220.0 LB/FT	367.7 LB/FT	4.0"	4.0"	4.0"	4.0"	4.0"	4.0"	4.0"	4.0"	4.0"	4.0"	4.0"	4.0"	4.0"	4.0"	4.0"	4.0"	4.0"	4.0
	+/- 60 PSF	314.0 LB/FT	469.9 LB/FT	4.0"	4.0"	4.0"	4.0"	4.0"	4.0"	4.0"	4.0"	4.0"	4.0"	4.0"	4.0"	4.0"	4.0"	4.0"	4.0"	4.0"	4.0
	+/- 70 PSF	407.7 LB/FT	573.1 LB/FT	4.0"	4.0"	4.0"	4.0"		4.0"	4.0"	3.9"	3.8"	3.3"	3.8"	3.4"	4.0"	4.0"	4.0"	4.0"	4.0"	4.0
	+/- 80 PSF	501.2 LB/FT	677.3 LB/FT	4.0"	4.0"	4.0"	4.0"		4.0"	4.0"	3.2"	3.1"	2.7"	3.1"	2.9"	4.0"	4.0"	4.0"	4.0"	4.0"	4.0
	+/- 90 PSF	594.6 LB/FT	782.6 LB/FT	4.0"	4.0"	4.0"	4.0"			4.0"		2.6"	2.3"	2.6"	2.5"	4.0"	4.0"	4.0"	4.0"	4.0"	4.0
	+/- 100 PSF	687.7 LB/FT	888.8 LB/FT		3.9"	4.0"	4.0"			4.0"		2.3"	2.0"	2.3"	2.2"	4.0"	4.0"	4.0"	4.0"	4.0"	4.0
	+/- 110 PSF	780.6 LB/FT	996.1 LB/FT		3.5"	4.0"	4.0"			3.7"		2.0"		2.0"		4.0"	4.0"	4.0"	4.0"	4.0"	4.0
	+/- 125 PSF	919.5 LB/FT	1158.9 LB/FT			4.0"	4.0"			3.2"						3.9"	4.0"	4.0"	4.0"	4.0"	4.0
84"	+/- 40 PSF	291.3 LB/FT	378.0 LB/FT	4.0"	4.0"	4.0"	4.0"	4.0"	4.0"	4.0"	4.0"	4.0"	4.0"	4.0"	4.0"	4.0"	4.0"	4.0"	4.0"	4.0"	4.0
	+/- 50 PSF	410.1 LB/FT	497.9 LB/FT	4.0"	4.0"	4.0"	4.0"		4.0"	4.0"	4.0"	3.9"	3.4"	3.9"	3.8"	4.0"	4.0"	4.0"	4.0"	4.0"	4.0
	+/- 60 PSF	528.7 LB/FT	619.1 LB/FT	4.0"	4.0"	4.0"	4.0"		4.0"	4.0"	3.3"	3.1"	2.7"	3.1"	3.1"	4.0"	4.0"	4.0"	4.0"	4.0"	4.0
	+/- 70 PSF	647.0 LB/FT	741.6 LB/FT		4.0"	4.0"	4.0"			4.0"		2.5"	2.2"	2.5"	2.5"	4.0"	4.0"	4.0"	4.0"	4.0"	4.0
	+/- 80 PSF	765.1 LB/FT	865.4 LB/FT		3.7"	4.0"	4.0"			4.0"		2.1"		2.2"	2.2"	4.0"	4.0"	4.0"	4.0"	4.0"	4.0
	+/- 90 PSF	882.9 LB/FT	990.5 LB/FT		3.3"	4.0"	4.0"			3.5"						4.0"	4.0"	4.0"	4.0"	4.0"	4.0
	+/- 112 PSF	1141.1 LB/FT	1270.4 LB/FT			4.0"										3.3"	4.0"	4.0"	4.0"	4.0"	4.0

V:\Projects\14-1323 Magnum III (Security Star) Slat Shutter Florida Product Approval-I.SWP\2017 FBC Update\14-1323e-Dwg-FL17344.1.dwg
08/11/2017 - 9:59am rickn

ANCHOR SCHEDULE: : INDICATES VALUES NOT APPROVED FOR USE.

BUILD-OUT MOUNT: MAGNUM 3.57 END RETENTION SHUTTER WITH SINGLE WALL SLATS (CONTINUED)

ANCHOR NOTES: SEE SHEET 5 FOR ANCHOR NOTES.

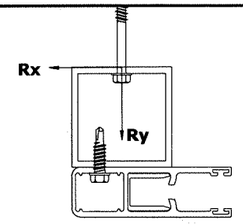

MAXIMUM SPACING (O.C.)

SLAT SPAN	DESIGN PRESSURE	Rx	Ry	1/4" ELCO ULTRACON TO 2846 PSI MIN. CONCRETE; 1.75" MIN. EMBEDMENT; 2.5" MIN. EDGE DISTANCE	1/4" SS ITW TAPCON TO 3192 PSI MIN. CONCRETE; 1.75" MIN. EMBEDMENT; 2.5" MIN. EDGE DISTANCE	5/16" ITW TAPCON: TO 2899 PSI MIN. CONCRETE; 2.25" MIN. EMBEDMENT; 3.125" MIN. EDGE DISTANCE	5/16" ITW TAPCON: TO GROUT-FILLED CONCRETE BLOCK; 2.25" MIN. EMBEDMENT; 4" MIN. EDGE DISTANCE	TO HOLLOW CONCRETE BLOCK; 1.75" MIN. EMBEDMENT; 4" MIN. EDGE DISTANCE	1/4" POWERS POWER-BOLT TO 3000 PSI MIN. CONCRETE; 2.5" MIN. EMBEDMENT; 3" MIN. EDGE DISTANCE	1/4" ALL-POINTS SOLID-SET: TO 3000 PSI MIN. CONCRETE; 0.875" MIN. EMBEDMENT; 3" MIN. EDGE DISTANCE	1/4" ALL-POINTS SOLID-SET: TO HOLLOW BLOCK; 0.875" MIN. EMBEDMENT; 3" MIN. EDGE DISTANCE	1/4" LAG SCREW TO G=0.55 MIN WOOD; 1.5" MIN. EMBEDMENT; 0.75" MIN. EDGE DISTANCE	5/16" LAG SCREW TO G=0.42 MIN WOOD; 2" MIN. EMBEDMENT; 0.75" MIN. EDGE DISTANCE	#14 WOOD SCREW TO G=0.55 MIN WOOD; 1.5" MIN. EMBEDMENT; 0.75" MIN. EDGE DISTANCE	#14 316 SS SMS W/ FULL THREAD PENETRATION (OR 1/4-20 316 SS THRU-BOLT) W/ 5/8" WASHER TO 0.125" MIN. 6063-T5 ALUM; 0.5" MIN. EDGE DISTANCE	#14 316 SS SMS W/ FULL THREAD PENETRATION (OR 1/4-20 316 SS THRU-BOLT) W/ 5/8" WASHER TO 0.25" MIN. 6063-T5 ALUM; 0.5" MIN. EDGE DISTANCE	3/8" POWERS WEDGE BOLT TO 3000 PSI MIN. CONCRETE; 3.5" MIN. EMBEDMENT; 4.5" MIN. EDGE DISTANCE	#14 316 SS SMS W/ FULL THREAD PENETRATION (OR 1/4-20 316 SS THRU-BOLT) W/ 5/8" WASHER TO 0.125" MIN. A36 STEEL; 0.5" MIN. EDGE DISTANCE	#14 316 SS SMS W/ FULL THREAD PENETRATION (OR 1/4-20 316 SS THRU-BOLT) W/ 5/8" WASHER TO 0.1875" MIN. A36 STEEL; 0.5" MIN. EDGE DISTANCE	#14 316 SS SMS W/ FULL THREAD PENETRATION (OR 1/4-20 316 SS THRU-BOLT) W/ 5/8" WASHER TO 0.25" MIN. A36 STEEL; 0.5" MIN. EDGE DISTANCE	#14 316 SS SMS W/ FULL THREAD PENETRATION (OR 1/4-20 316 SS THRU-BOLT) W/ 5/8" WASHER TO 0.5" MIN. STEEL; 0.5" MIN. EDGE DISTANCE
96"	+/- 30 PSF	295.7 LB/FT	336.9 LB/FT	4.0"	4.0"	4.0"	4.0"	4.0"	4.0"	4.0"	4.0"	4.0"	4.0"	4.0"	4.0"	4.0"	4.0"	4.0"	4.0"	4.0"	4.0"
	+/- 40 PSF	441.4 LB/FT	473.8 LB/FT	4.0"	4.0"	4.0"	4.0"		4.0"	4.0"	4.0"	3.7"	3.3"	3.8"	3.9"	4.0"	4.0"	4.0"	4.0"	4.0"	4.0"
	+/- 50 PSF	586.8 LB/FT	612.4 LB/FT	4.0"	4.0"	4.0"	4.0"		4.0"	4.0"	3.2"	2.8"	2.5"	2.9"	3.0"	4.0"	4.0"	4.0"	4.0"	4.0"	4.0"
	+/- 60 PSF	731.8 LB/FT	752.8 LB/FT		4.0"	4.0"	4.0"			4.0"		2.3"		2.3"	2.5"	4.0"	4.0"	4.0"	4.0"	4.0"	4.0"
	+/- 70 PSF	876.6 LB/FT	894.8 LB/FT		3.4"	4.0"	4.0"			3.8"					2.1"	4.0"	4.0"	4.0"	4.0"	4.0"	4.0"
	+/- 80 PSF	1021.1 LB/FT	1038.5 LB/FT			4.0"	4.0"			3.2"						3.9"	4.0"	4.0"	4.0"	4.0"	4.0"
	+/- 90 PSF	1165.2 LB/FT	1183.9 LB/FT			4.0"										3.4"	4.0"	4.0"	4.0"	4.0"	4.0"
	+/- 104 PSF	1366.5 LB/FT	1390.2 LB/FT													2.9"	4.0"	4.0"	4.0"	4.0"	4.0"
108"	+/- 30 PSF	411.0 LB/FT	405.7 LB/FT	4.0"	4.0"	4.0"	4.0"	4.0"	4.0"	4.0"	4.0"	4.0"	3.6"	4.0"	4.0"	4.0"	4.0"	4.0"	4.0"	4.0"	4.0"
	+/- 40 PSF	585.0 LB/FT	561.2 LB/FT	4.0"	4.0"	4.0"	4.0"		4.0"	4.0"	3.3"	2.9"	2.5"	3.0"	3.2"	4.0"	4.0"	4.0"	4.0"	4.0"	4.0"
	+/- 50 PSF	758.7 LB/FT	718.7 LB/FT		4.0"	4.0"	4.0"			4.0"		2.2"		2.3"	2.5"	4.0"	4.0"	4.0"	4.0"	4.0"	4.0"
	+/- 60 PSF	932.1 LB/FT	878.5 LB/FT		3.4"	4.0"	4.0"			3.7"					2.1"	4.0"	4.0"	4.0"	4.0"	4.0"	4.0"
	+/- 70 PSF	1105.1 LB/FT	1040.4 LB/FT			4.0"	3.8"			3.1"						3.7"	4.0"	4.0"	4.0"	4.0"	4.0"
	+/- 80 PSF	1277.7 LB/FT	1204.3 LB/FT			4.0"										3.2"	4.0"	4.0"	4.0"	4.0"	4.0"
	+/- 90 PSF	1449.9 LB/FT	1370.5 LB/FT													2.9"	4.0"	4.0"	4.0"	4.0"	4.0"
	+/- 98 PSF	1587.4 LB/FT	1504.9 LB/FT													2.6"	4.0"	4.0"	4.0"	4.0"	4.0"
120"	+/- 20 PSF	318.3 LB/FT	298.1 LB/FT	4.0"	4.0"	4.0"	4.0"	4.0"	4.0"	4.0"	4.0"	4.0"	4.0"	4.0"	4.0"	4.0"	4.0"	4.0"	4.0"	4.0"	4.0"
	+/- 30 PSF	522.8 LB/FT	469.6 LB/FT	4.0"	4.0"	4.0"	4.0"		4.0"	4.0"	3.8"	3.3"	2.8"	3.4"	3.8"	4.0"	4.0"	4.0"	4.0"	4.0"	4.0"
	+/- 40 PSF	726.9 LB/FT	643.7 LB/FT	4.0"	4.0"	4.0"	4.0"		4.0"	4.0"		2.4"	2.1"	2.4"	2.8"	4.0"	4.0"	4.0"	4.0"	4.0"	4.0"
	+/- 50 PSF	930.6 LB/FT	820.5 LB/FT		3.5"	4.0"	4.0"			3.8"					2.2"	4.0"	4.0"	4.0"	4.0"	4.0"	4.0"
	+/- 60 PSF	1133.8 LB/FT	1000.0 LB/FT			4.0"	3.8"			3.1"						3.8"	4.0"	4.0"	4.0"	4.0"	4.0"
	+/- 70 PSF	1336.6 LB/FT	1182.1 LB/FT			3.9"										3.2"	4.0"	4.0"	4.0"	4.0"	4.0"
	+/- 80 PSF	1539.0 LB/FT	1366.9 LB/FT													2.8"	4.0"	4.0"	4.0"	4.0"	4.0"
	+/- 90 PSF	1740.9 LB/FT	1554.3 LB/FT													2.4"	4.0"	4.0"	4.0"	4.0"	4.0"
	+/- 93 PSF	1801.4 LB/FT	1611.0 LB/FT													2.4"	4.0"	4.0"	4.0"	4.0"	4.0"
132"	+/- 20 PSF	397.7 LB/FT	340.7 LB/FT	4.0"	4.0"	4.0"	4.0"	4.0"	4.0"	4.0"	4.0"	4.0"	3.8"	4.0"	4.0"	4.0"	4.0"	4.0"	4.0"	4.0"	4.0"
	+/- 30 PSF	633.9 LB/FT	530.5 LB/FT	4.0"	4.0"	4.0"	4.0"		4.0"	4.0"	3.3"	2.8"	2.4"	2.8"	3.3"	4.0"	4.0"	4.0"	4.0"	4.0"	4.0"
	+/- 40 PSF	869.6 LB/FT	723.5 LB/FT		3.8"	4.0"	4.0"			4.0"		2.0"		2.1"	2.4"	4.0"	4.0"	4.0"	4.0"	4.0"	4.0"
	+/- 50 PSF	1104.8 LB/FT	919.9 LB/FT			4.0"	4.0"			3.3"						4.0"	4.0"	4.0"	4.0"	4.0"	4.0"
	+/- 60 PSF	1338.3 LB/FT	1127.1 LB/FT			4.0"										3.3"	4.0"	4.0"	4.0"	4.0"	4.0"
	+/- 70 PSF	1573.6 LB/FT	1322.3 LB/FT													2.8"	4.0"	4.0"	4.0"	4.0"	4.0"
	+/- 80 PSF	1805.1 LB/FT	1542.2 LB/FT													2.4"	4.0"	4.0"	4.0"	4.0"	4.0"
	+/- 90 PSF	2040.4 LB/FT	1737.7 LB/FT													2.1"	4.0"	4.0"	4.0"	4.0"	4.0"
144"	+/- 20 PSF	476.3 LB/FT	381.2 LB/FT	4.0"	4.0"	4.0"	4.0"	4.0"	4.0"	4.0"	4.0"	3.7"	3.2"	3.8"	4.0"	4.0"	4.0"	4.0"	4.0"	4.0"	4.0"
	+/- 30 PSF	745.6 LB/FT	589.5 LB/FT	4.0"	4.0"	4.0"	4.0"		4.0"	4.0"		2.4"	2.0"	2.4"	2.9"	4.0"	4.0"	4.0"	4.0"	4.0"	4.0"
	+/- 40 PSF	1014.4 LB/FT	801.8 LB/FT		3.3"	4.0"	4.0"			3.7"					2.2"	4.0"	4.0"	4.0"	4.0"	4.0"	4.0"
	+/- 50 PSF	1282.6 LB/FT	1018.0 LB/FT			4.0"										3.5"	4.0"	4.0"	4.0"	4.0"	4.0"
	+/- 60 PSF	1547.4 LB/FT	1256.9 LB/FT													2.9"	4.0"	4.0"	4.0"	4.0"	4.0"
	+/- 70 PSF	1817.2 LB/FT	1462.2 LB/FT													2.4"	4.0"	4.0"	4.0"	4.0"	4.0"
	+/- 86 PSF	2243.0 LB/FT	1828.7 LB/FT														4.0"	4.0"	4.0"	4.0"	4.0"
156"	+/- 10 PSF	250.5 LB/FT	198.4 LB/FT	4.0"	4.0"	4.0"	4.0"	4.0"	4.0"	4.0"	4.0"	4.0"	4.0"	4.0"	4.0"	4.0"	4.0"	4.0"	4.0"	4.0"	4.0"
	+/- 20 PSF	555.0 LB/FT	421.3 LB/FT	4.0"	4.0"	4.0"	4.0"		4.0"	4.0"	3.9"	3.2"	2.8"	3.3"	4.0"	4.0"	4.0"	4.0"	4.0"	4.0"	4.0"
	+/- 30 PSF	858.8 LB/FT	649.3 LB/FT		4.0"	4.0"	4.0"			4.0"		2.1"		2.1"	2.6"	4.0"	4.0"	4.0"	4.0"	4.0"	4.0"
	+/- 40 PSF	1161.8 LB/FT	882.5 LB/FT			4.0"	4.0"			3.3"						3.9"	4.0"	4.0"	4.0"	4.0"	4.0"
	+/- 50 PSF	1464.1 LB/FT	1120.9 LB/FT			3.8"										3.1"	4.0"	4.0"	4.0"	4.0"	4.0"
	+/- 60 PSF	1761.7 LB/FT	1391.0 LB/FT													2.5"	4.0"	4.0"	4.0"	4.0"	4.0"
	+/- 70 PSF	2066.4 LB/FT	1612.9 LB/FT													2.2"	4.0"	4.0"	4.0"	4.0"	4.0"
	+/- 78 PSF	2306.4 LB/FT	1815.4 LB/FT														4.0"	4.0"	4.0"	4.0"	4.0"

V:\Projects\14-1323 Magnum III (Security Star) Stat Shutter Florida Product Approval-I-SWP\2017 FBC Update\14-1323a-Dwg-FL17344.1.dwg
08/11/2017 - 9:59am rickn

ANCHOR SCHEDULE: : INDICATES VALUES NOT APPROVED FOR USE.

BUILD-OUT MOUNT: MAGNUM 3.57 END RETENTION SHUTTER WITH SINGLE WALL SLATS (CONTINUED)

ANCHOR NOTES: SEE SHEET 5 FOR ANCHOR NOTES.

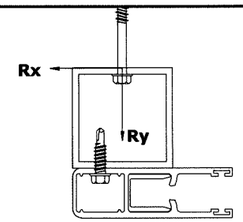

MAXIMUM SPACING (O.C.)

SLAT SPAN	DESIGN PRESSURE	Rx	Ry	1/4" ELCO ULTRACON TO 2846 PSI MIN. CONCRETE; 1.75" MIN. EMBEDMENT; 2.5" MIN. EDGE DISTANCE	1/4" SS ITW TAPCON TO 3192 PSI MIN. CONCRETE; 1.75" MIN. EMBEDMENT; 2.5" MIN. EDGE DISTANCE	5/16" ITW TAPCON: TO 2899 PSI MIN. CONCRETE; 2.25" MIN. EMBEDMENT; 3.125" MIN. EDGE DISTANCE	5/16" ITW TAPCON: TO GROUT-FILLED CONCRETE BLOCK; 2.25" MIN. EMBEDMENT; 4" MIN. EDGE DISTANCE	5/16" ITW TAPCON: TO HOLLOW CONCRETE BLOCK; 1.75" MIN. EMBEDMENT; 4" MIN. EDGE DISTANCE	1/4" POWERS POWER-BOLT TO 3000 PSI MIN. CONCRETE; 2.5" MIN. EMBEDMENT; 3" MIN. EDGE DISTANCE	1/4" ALL-POINTS SOLID-SET: TO 3000 PSI MIN. CONCRETE; 0.875" MIN. EMBEDMENT; 3" MIN. EDGE DISTANCE	1/4" ALL-POINTS SOLID-SET: TO HOLLOW BLOCK; 0.875" MIN. EMBEDMENT; 3" MIN. EDGE DISTANCE	1/4" LAG SCREW TO G=0.55 MIN WOOD; 1.5" MIN. EMBEDMENT; 0.75" MIN. EDGE DISTANCE	5/16" LAG SCREW TO G=0.42 MIN WOOD; 2" MIN. EMBEDMENT; 0.75" MIN. EDGE DISTANCE	#14 WOOD SCREW TO G=0.55 MIN WOOD; 1.5" MIN. EMBEDMENT; 0.75" MIN. EDGE DISTANCE	#14 316 SS SMS W/ FULL THREAD PENETRATION (OR 1/4-20 316 SS THRU-BOLT) W/ 5/8" WASHER TO 0.125" MIN. 6063-T5 ALUM; 0.5" MIN. EDGE DISTANCE	#14 316 SS SMS W/ FULL THREAD PENETRATION (OR 1/4-20 316 SS THRU-BOLT) W/ 5/8" WASHER TO 0.25" MIN. 6063-T5 ALUM; 0.5" MIN. EDGE DISTANCE	3/8" POWERS WEDGE BOLT TO 3000 PSI MIN. CONCRETE; 3.5" MIN. EMBEDMENT; 4.5" MIN. EDGE DISTANCE	#14 316 SS SMS W/ FULL THREAD PENETRATION (OR 1/4-20 316 SS THRU-BOLT) W/ 5/8" WASHER TO 0.125" MIN. A36 STEEL; 0.5" MIN. EDGE DISTANCE	#14 316 SS SMS W/ FULL THREAD PENETRATION (OR 1/4-20 316 SS THRU-BOLT) W/ 5/8" WASHER TO 0.1875" MIN. A36 STEEL; 0.5" MIN. EDGE DISTANCE	#14 316 SS SMS W/ FULL THREAD PENETRATION (OR 1/4-20 316 SS THRU-BOLT) W/ 5/8" WASHER TO 0.25" MIN. A36 STEEL; 0.5" MIN. EDGE DISTANCE	#14 316 SMS W/ THRE PENETRA (OR 1/4 316-S THRU-B W/ 5/ WASHE 0.5" MIN STEE 0.5" M EDG DISTAN
168"	+/- 10 PSF	294.1 LB/FT	219.1 LB/FT	4.0"	4.0"	4.0"	4.0"	4.0"	4.0"	4.0"	4.0"	4.0"	4.0"	4.0"	4.0"	4.0"	4.0"	4.0"	4.0"	4.0"	4.0
	+/- 20 PSF	634.5 LB/FT	460.8 LB/FT	4.0"	4.0"	4.0"	4.0"		4.0"	4.0"	3.5"	2.8"	2.4"	2.9"	3.7"	4.0"	4.0"	4.0"	4.0"	4.0"	4.0
	+/- 30 PSF	974.0 LB/FT	709.1 LB/FT		3.6"	4.0"	4.0"			4.0"					2.4"	4.0"	4.0"	4.0"	4.0"	4.0"	4.0
	+/- 40 PSF	1312.7 LB/FT	964.1 LB/FT			4.0"										3.5"	4.0"	4.0"	4.0"	4.0"	4.0
	+/- 50 PSF	1650.3 LB/FT	1225.7 LB/FT													2.8"	4.0"	4.0"	4.0"	4.0"	4.0
	+/- 60 PSF	1981.6 LB/FT	1530.4 LB/FT													2.3"	4.0"	4.0"	4.0"	4.0"	4.0
	+/- 72 PSF	2389.7 LB/FT	1824.0 LB/FT														4.0"	4.0"	4.0"	4.0"	4.0
180"	+/- 10 PSF	337.6 LB/FT	239.1 LB/FT	4.0"	4.0"	4.0"	4.0"	4.0"	4.0"	4.0"	4.0"	4.0"	4.0"	4.0"	4.0"	4.0"	4.0"	4.0"	4.0"	4.0"	4.0
	+/- 20 PSF	715.2 LB/FT	500.1 LB/FT	4.0"	4.0"	4.0"	4.0"		4.0"	4.0"	3.1"	2.5"	2.2"	2.6"	3.3"	4.0"	4.0"	4.0"	4.0"	4.0"	4.0
	+/- 30 PSF	1091.7 LB/FT	769.4 LB/FT		3.2"	4.0"	4.0"			3.6"					2.2"	4.0"	4.0"	4.0"	4.0"	4.0"	4.0
	+/- 40 PSF	1467.1 LB/FT	1047.1 LB/FT			3.9"										3.2"	4.0"	4.0"	4.0"	4.0"	4.0
	+/- 50 PSF	1841.4 LB/FT	1332.9 LB/FT													2.5"	4.0"	4.0"	4.0"	4.0"	4.0
	+/- 67 PSF	2474.8 LB/FT	1837.7 LB/FT														4.0"	4.0"	4.0"	4.0"	4.0
192"	+/- 10 PSF	381.2 LB/FT	258.8 LB/FT	4.0"	4.0"	4.0"	4.0"	4.0"	4.0"	4.0"	4.0"	4.0"	4.0"	4.0"	4.0"	4.0"	4.0"	4.0"	4.0"	4.0"	4.0
	+/- 20 PSF	797.3 LB/FT	539.5 LB/FT	4.0"	4.0"	4.0"	4.0"		4.0"	4.0"		2.3"		2.4"	3.1"	4.0"	4.0"	4.0"	4.0"	4.0"	4.0
	+/- 30 PSF	1212.0 LB/FT	830.4 LB/FT			4.0"	4.0"			3.3"						3.9"	4.0"	4.0"	4.0"	4.0"	4.0
	+/- 40 PSF	1625.4 LB/FT	1131.7 LB/FT													2.9"	4.0"	4.0"	4.0"	4.0"	4.0
	+/- 50 PSF	2037.4 LB/FT	1443.1 LB/FT													2.3"	4.0"	4.0"	4.0"	4.0"	4.0
	+/- 62 PSF	2529.7 LB/FT	1830.2 LB/FT														4.0"	4.0"	4.0"	4.0"	4.0
204"	+/- 10 PSF	425.2 LB/FT	278.2 LB/FT	4.0"	4.0"	4.0"	4.0"	4.0"	4.0"	4.0"	4.0"	4.0"	3.7"	4.0"	4.0"	4.0"	4.0"	4.0"	4.0"	4.0"	4.0
	+/- 20 PSF	880.9 LB/FT	579.0 LB/FT		4.0"	4.0"	4.0"			4.0"		2.1"		2.1"	2.8"	4.0"	4.0"	4.0"	4.0"	4.0"	4.0
	+/- 30 PSF	1335.1 LB/FT	892.4 LB/FT			4.0"										3.6"	4.0"	4.0"	4.0"	4.0"	4.0
	+/- 40 PSF	1787.6 LB/FT	1218.3 LB/FT													2.7"	4.0"	4.0"	4.0"	4.0"	4.0
	+/- 50 PSF	2238.3 LB/FT	1556.6 LB/FT													2.1"	4.0"	4.0"	4.0"	4.0"	4.0
	+/- 58 PSF	2597.6 LB/FT	1836.1 LB/FT														4.0"	4.0"	4.0"	4.0"	4.0
216"	+/- 10 PSF	469.7 LB/FT	297.5 LB/FT	4.0"	4.0"	4.0"	4.0"	4.0"	4.0"	4.0"	4.0"	3.9"	3.3"	4.0"	4.0"	4.0"	4.0"	4.0"	4.0"	4.0"	4.0
	+/- 20 PSF	966.3 LB/FT	618.9 LB/FT		3.8"	4.0"	4.0"			4.0"					2.6"	4.0"	4.0"	4.0"	4.0"	4.0"	4.0
	+/- 30 PSF	1461.0 LB/FT	955.5 LB/FT			4.0"										3.3"	4.0"	4.0"	4.0"	4.0"	4.0
	+/- 40 PSF	1953.7 LB/FT	1307.1 LB/FT													2.4"	4.0"	4.0"	4.0"	4.0"	4.0
	+/- 50 PSF	2444.2 LB/FT	1673.7 LB/FT														4.0"	4.0"	4.0"	4.0"	4.0
	+/- 55 PSF	2688.7 LB/FT	1862.5 LB/FT														4.0"	4.0"	4.0"	4.0"	4.0

08/11/2017 - 9:59am rickn V:\Projects\14-1323 Magnum III (Security Star) Slat Shutter Florida Product Approval-I.SWP2017 FBC Update\14-1323e-Dwg-FL17344.1.dwg

ANCHOR SCHEDULE: : INDICATES VALUES NOT APPROVED FOR USE.

INTERIOR MOUNT: MAGNUM 3.57 END RETENTION SHUTTER WITH SINGLE WALL SLATS

ANCHOR NOTES: SEE SHEET 5 FOR ANCHOR NOTES.

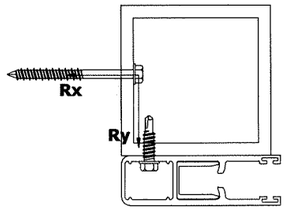

MAXIMUM SPACING (O.C.)

SLAT SPAN	DESIGN PRESSURE	Rx	Ry	1/4" ELCO ULTRACON TO 2846 PSI MIN. CONCRETE; 1.75" MIN. EMBEDMENT; 2.5" MIN. EDGE DISTANCE	1/4" SS ITW TAPCON TO 3192 PSI MIN. CONCRETE; 1.75" MIN. EMBEDMENT; 2.5" MIN. EDGE DISTANCE	5/16" ITW TAPCON: TO 2899 PSI MIN. CONCRETE; 2.25" MIN. EMBEDMENT; 3.125" MIN. EDGE DISTANCE	5/16" ITW TAPCON: TO GROUT-FILLED CONCRETE BLOCK; 2.25" MIN. EMBEDMENT; 4" MIN. EDGE DISTANCE	5/16" ITW TAPCON: TO HOLLOW CONCRETE BLOCK; 1.75" MIN. EMBEDMENT; 4" MIN. EDGE DISTANCE	1/4" POWERS POWER-BOLT TO 3000 PSI MIN. CONCRETE; 2.5" MIN. EMBEDMENT; 3" MIN. EDGE DISTANCE	1/4" ALL-POINTS SOLID-SET: TO 3000 PSI MIN. CONCRETE; 0.875" MIN. EMBEDMENT; 3" MIN. EDGE DISTANCE	1/4" ALL-POINTS SOLID-SET: TO HOLLOW BLOCK; 0.875" MIN. EMBEDMENT; 3" MIN. EDGE DISTANCE	1/4" LAG SCREW TO G=0.55 MIN WOOD; 1.5" MIN. EMBEDMENT; 0.75" MIN. EDGE DISTANCE	5/16" LAG SCREW TO G=0.42 MIN WOOD; 2" MIN. EMBEDMENT; 0.75" MIN. EDGE DISTANCE	#14 WOOD SCREW TO G=0.55 MIN WOOD; 1.5" MIN. EMBEDMENT; 0.75" MIN. EDGE DISTANCE	#14 316 SS SMS W/ FULL THREAD PENETRATION (OR 1/4-20 316 SS THRU-BOLT) W/ 5/8" WASHER TO 0.125" MIN. 6063-T5 ALUM; 0.5" MIN. EDGE DISTANCE	#14 316 SS SMS W/ FULL THREAD PENETRATION (OR 1/4-20 316 SS THRU-BOLT) W/ 5/8" WASHER TO 0.25" MIN. 6063-T5 ALUM; 0.5" MIN. EDGE DISTANCE	3/8" POWERS WEDGE BOLT TO 3000 PSI MIN. CONCRETE; 3.5" MIN. EMBEDMENT; 4.5" MIN. EDGE DISTANCE	#14 316 SS SMS W/ FULL THREAD PENETRATION (OR 1/4-20 316 SS THRU-BOLT) W/ 5/8" WASHER TO 0.125" MIN. A36 STEEL; 0.5" MIN. EDGE DISTANCE	#14 316 SS SMS W/ FULL THREAD PENETRATION (OR 1/4-20 316 SS THRU-BOLT) W/ 5/8" WASHER TO 0.1875" MIN. A36 STEEL; 0.5" MIN. EDGE DISTANCE	#14 316 SS SMS W/ FULL THREAD PENETRATION (OR 1/4-20 316 SS THRU-BOLT) W/ 5/8" WASHER TO 0.25" MIN. A36 STEEL; 0.5" MIN. EDGE DISTANCE	#14 31 SMS W/ – THRE PENETR (OR 316- THRU- W/ 8 WASHE 0.5" MIN STEE 0.5" M EDG DISTA
48"	+/- 40 PSF	53.4 LB/FT	80.0 LB/FT	4.0"	4.0"	4.0"	4.0"	4.0"	4.0"	4.0"	4.0"	4.0"	4.0"	4.0"	4.0"	4.0"	4.0"	4.0"	4.0"	4.0
	+/- 50 PSF	66.7 LB/FT	100.0 LB/FT	4.0"	4.0"	4.0"	4.0"	4.0"	4.0"	4.0"	4.0"	4.0"	4.0"	4.0"	4.0"	4.0"	4.0"	4.0"	4.0"	4.0
	+/- 60 PSF	80.0 LB/FT	120.0 LB/FT	4.0"	4.0"	4.0"	4.0"	4.0"	4.0"	4.0"	4.0"	4.0"	4.0"	4.0"	4.0"	4.0"	4.0"	4.0"	4.0"	4.0
	+/- 70 PSF	93.4 LB/FT	140.0 LB/FT	4.0"	4.0"	4.0"	4.0"	4.0"	4.0"	4.0"	4.0"	4.0"	4.0"	4.0"	4.0"	4.0"	4.0"	4.0"	4.0"	4.0
	+/- 80 PSF	106.7 LB/FT	160.0 LB/FT	4.0"	4.0"	4.0"	4.0"	4.0"	4.0"	4.0"	4.0"	4.0"	4.0"	4.0"	4.0"	4.0"	4.0"	4.0"	4.0"	4.0
	+/- 90 PSF	120.1 LB/FT	180.0 LB/FT	4.0"	4.0"	4.0"	4.0"	4.0"	4.0"	4.0"	4.0"	4.0"	4.0"	4.0"	4.0"	4.0"	4.0"	4.0"	4.0"	4.0
	+/- 100 PSF	133.4 LB/FT	200.0 LB/FT	4.0"	4.0"	4.0"	4.0"	4.0"	4.0"	4.0"	4.0"	4.0"	4.0"	4.0"	4.0"	4.0"	4.0"	4.0"	4.0"	4.0
	+/- 110 PSF	148.3 LB/FT	220.5 LB/FT	4.0"	4.0"	4.0"	4.0"	4.0"	4.0"	4.0"	4.0"	4.0"	4.0"	4.0"	4.0"	4.0"	4.0"	4.0"	4.0"	4.0
	+/- 120 PSF	225.5 LB/FT	260.2 LB/FT	4.0"	4.0"	4.0"	4.0"	4.0"	4.0"	4.0"	4.0"	4.0"	4.0"	4.0"	4.0"	4.0"	4.0"	4.0"	4.0"	4.0
	+/- 130 PSF	302.9 LB/FT	300.4 LB/FT	4.0"	4.0"	4.0"	4.0"	4.0"	4.0"	4.0"	4.0"	4.0"	4.0"	4.0"	4.0"	4.0"	4.0"	4.0"	4.0"	4.0
	+/- 140 PSF	380.4 LB/FT	341.1 LB/FT	4.0"	4.0"	4.0"	4.0"	4.0"	4.0"	4.0"	4.0"	4.0"	3.9"	4.0"	4.0"	4.0"	4.0"	4.0"	4.0"	4.0
	+/- 150 PSF	458.0 LB/FT	382.2 LB/FT	4.0"	4.0"	4.0"	4.0"	4.0"	4.0"	4.0"	4.0"	3.8"	3.3"	3.9"	4.0"	4.0"	4.0"	4.0"	4.0"	4.0
	+/- 160 PSF	535.7 LB/FT	423.8 LB/FT	4.0"	4.0"	4.0"	4.0"		4.0"	4.0"	4.0"	3.3"	2.8"	3.4"	4.0"	4.0"	4.0"	4.0"	4.0"	4.0
	+/- 170 PSF	613.5 LB/FT	465.8 LB/FT	4.0"	4.0"	4.0"	4.0"		4.0"	4.0"	3.5"	2.9"	2.5"	3.0"	3.7"	4.0"	4.0"	4.0"	4.0"	4.0
	+/- 180 PSF	691.5 LB/FT	508.2 LB/FT	4.0"	4.0"	4.0"	4.0"		4.0"	4.0"	3.2"	2.6"	2.2"	2.7"	3.3"	4.0"	4.0"	4.0"	4.0"	4.0
	+/- 190 PSF	769.5 LB/FT	551.1 LB/FT	4.0"	4.0"	4.0"	4.0"		4.0"	4.0"		2.3"	2.0"	2.4"	3.0"	4.0"	4.0"	4.0"	4.0"	4.0
	+/- 206 PSF	894.5 LB/FT	620.6 LB/FT		4.0"	4.0"	4.0"			4.0"		2.0"		2.1"	2.7"	4.0"	4.0"	4.0"	4.0"	4.0
60"	+/- 40 PSF	66.7 LB/FT	100.0 LB/FT	4.0"	4.0"	4.0"	4.0"	4.0"	4.0"	4.0"	4.0"	4.0"	4.0"	4.0"	4.0"	4.0"	4.0"	4.0"	4.0"	4.0
	+/- 50 PSF	83.4 LB/FT	125.0 LB/FT	4.0"	4.0"	4.0"	4.0"	4.0"	4.0"	4.0"	4.0"	4.0"	4.0"	4.0"	4.0"	4.0"	4.0"	4.0"	4.0"	4.0
	+/- 60 PSF	184.6 LB/FT	173.8 LB/FT	4.0"	4.0"	4.0"	4.0"	4.0"	4.0"	4.0"	4.0"	4.0"	4.0"	4.0"	4.0"	4.0"	4.0"	4.0"	4.0"	4.0
	+/- 70 PSF	289.4 LB/FT	224.0 LB/FT	4.0"	4.0"	4.0"	4.0"	4.0"	4.0"	4.0"	4.0"	4.0"	4.0"	4.0"	4.0"	4.0"	4.0"	4.0"	4.0"	4.0
	+/- 80 PSF	394.4 LB/FT	274.8 LB/FT	4.0"	4.0"	4.0"	4.0"	4.0"	4.0"	4.0"	4.0"	4.0"	3.9"	4.0"	4.0"	4.0"	4.0"	4.0"	4.0"	4.0
	+/- 90 PSF	499.5 LB/FT	326.0 LB/FT	4.0"	4.0"	4.0"	4.0"	4.0"	4.0"	4.0"	4.0"	3.6"	3.1"	3.8"	4.0"	4.0"	4.0"	4.0"	4.0"	4.0
	+/- 100 PSF	604.7 LB/FT	377.7 LB/FT	4.0"	4.0"	4.0"	4.0"	3.8"	4.0"	4.0"	3.9"	3.0"	2.6"	3.2"	4.0"	4.0"	4.0"	4.0"	4.0"	4.0
	+/- 110 PSF	710.1 LB/FT	429.9 LB/FT	4.0"	4.0"	4.0"	4.0"		4.0"	4.0"	3.3"	2.6"	2.2"	2.7"	3.7"	4.0"	4.0"	4.0"	4.0"	4.0
	+/- 120 PSF	815.7 LB/FT	482.6 LB/FT	4.0"	4.0"	4.0"	4.0"		4.0"	4.0"		2.3"		2.4"	3.3"	4.0"	4.0"	4.0"	4.0"	4.0
	+/- 130 PSF	921.4 LB/FT	535.7 LB/FT		4.0"	4.0"	4.0"			4.0"		2.0"		2.1"	2.9"	4.0"	4.0"	4.0"	4.0"	4.0
	+/- 140 PSF	1027.2 LB/FT	589.4 LB/FT		3.7"	4.0"	4.0"			4.0"					2.6"	4.0"	4.0"	4.0"	4.0"	4.0
	+/- 150 PSF	1133.1 LB/FT	643.5 LB/FT		3.4"	4.0"	4.0"			3.8"					2.4"	4.0"	4.0"	4.0"	4.0"	4.0
72"	+/- 40 PSF	232.5 LB/FT	159.9 LB/FT	4.0"	4.0"	4.0"	4.0"	4.0"	4.0"	4.0"	4.0"	4.0"	4.0"	4.0"	4.0"	4.0"	4.0"	4.0"	4.0"	4.0
	+/- 50 PSF	367.2 LB/FT	220.6 LB/FT	4.0"	4.0"	4.0"	4.0"	4.0"	4.0"	4.0"	4.0"	4.0"	4.0"	4.0"	4.0"	4.0"	4.0"	4.0"	4.0"	4.0
	+/- 60 PSF	502.0 LB/FT	281.9 LB/FT	4.0"	4.0"	4.0"	4.0"	4.0"	4.0"	4.0"	4.0"	3.7"	3.2"	3.9"	4.0"	4.0"	4.0"	4.0"	4.0"	4.0
	+/- 70 PSF	637.0 LB/FT	343.8 LB/FT	4.0"	4.0"	4.0"	4.0"	3.9"	4.0"	4.0"	3.9"	2.9"	2.5"	3.1"	4.0"	4.0"	4.0"	4.0"	4.0"	4.0
	+/- 80 PSF	772.3 LB/FT	406.3 LB/FT	4.0"	4.0"	4.0"	4.0"		4.0"	4.0"	3.2"	2.4"	2.1"	2.6"	3.7"	4.0"	4.0"	4.0"	4.0"	4.0
	+/- 90 PSF	907.7 LB/FT	469.5 LB/FT		4.0"	4.0"	4.0"		4.0"	4.0"		2.1"		2.2"	3.2"	4.0"	4.0"	4.0"	4.0"	4.0
	+/- 100 PSF	1043.3 LB/FT	533.2 LB/FT		3.8"	4.0"	4.0"			4.0"					2.8"	4.0"	4.0"	4.0"	4.0"	4.0
	+/- 110 PSF	1179.1 LB/FT	597.5 LB/FT		3.3"	4.0"	4.0"			3.8"					2.5"	4.0"	4.0"	4.0"	4.0"	4.0
	+/- 125 PSF	1383.2 LB/FT	695.2 LB/FT			4.0"	3.8"			3.2"					2.1"	3.8"	4.0"	4.0"	4.0"	4.0
84"	+/- 40 PSF	442.6 LB/FT	226.8 LB/FT	4.0"	4.0"	4.0"	4.0"	4.0"	4.0"	4.0"	4.0"	4.0"	3.6"	4.0"	4.0"	4.0"	4.0"	4.0"	4.0"	4.0
	+/- 50 PSF	609.4 LB/FT	298.7 LB/FT	4.0"	4.0"	4.0"	4.0"	4.0"	4.0"	4.0"	4.0"	3.1"	2.6"	3.3"	4.0"	4.0"	4.0"	4.0"	4.0"	4.0
	+/- 60 PSF	776.4 LB/FT	371.4 LB/FT	4.0"	4.0"	4.0"	4.0"		4.0"	4.0"	3.3"	2.5"	2.1"	2.6"	3.9"	4.0"	4.0"	4.0"	4.0"	4.0
	+/- 70 PSF	943.7 LB/FT	444.8 LB/FT		4.0"	4.0"	4.0"		4.0"	4.0"		2.0"		2.1"	3.3"	4.0"	4.0"	4.0"	4.0"	4.0
	+/- 80 PSF	1111.3 LB/FT	519.1 LB/FT		3.6"	4.0"	4.0"			4.0"					2.8"	4.0"	4.0"	4.0"	4.0"	4.0
	+/- 90 PSF	1279.2 LB/FT	594.2 LB/FT		3.2"	4.0"	4.0"			3.6"					2.4"	4.0"	4.0"	4.0"	4.0"	4.0
	+/- 112 PSF	1649.4 LB/FT	762.1 LB/FT			4.0"										3.3"	4.0"	4.0"	4.0"	4.0

V:\Projects\14-1323 Magnum III (Security Slat) Slat Shutter Florida Product Approval-I-SWP\2017 FBC Update\14-1323e-Dwg-FL17344.1.dwg
08/11/2017 - 10:00am rickn

ANCHOR SCHEDULE: : INDICATES VALUES NOT APPROVED FOR USE.

INTERIOR MOUNT: MAGNUM 3.57 END RETENTION SHUTTER WITH SINGLE WALL SLATS (CONTINUED)

ANCHOR NOTES: SEE SHEET 5 FOR ANCHOR NOTES.

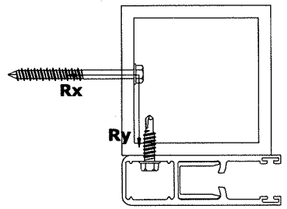

SLAT SPAN	DESIGN PRESSURE	Rx	Ry	MAXIMUM SPACING (O.C.)																	
						5/16" ITW TAPCON				1/4" ALL-POINTS SOLID-SET											
				1/4" ELCO ULTRACON TO 2846 PSI MIN. CONCRETE; 1.75" MIN. EMBEDMENT; 2.5" MIN. EDGE DISTANCE	1/4" SS ITW TAPCON TO 3192 PSI MIN. CONCRETE; 1.75" MIN. EMBEDMENT; 2.5" MIN. EDGE DISTANCE	TO 2899 PSI MIN. CONCRETE; 2.25" MIN. EMBEDMENT; 3.125" MIN. EDGE DISTANCE	TO GROUT-FILLED CONCRETE BLOCK; 2.25" MIN. EMBEDMENT; 4" MIN. EDGE DISTANCE	TO HOLLOW CONCRETE BLOCK; 1.75" MIN. EMBEDMENT; 4" MIN. EDGE DISTANCE	1/4" POWERS POWER-BOLT TO 3000 PSI MIN. CONCRETE; 2.5" MIN. EMBEDMENT; 3" MIN. EDGE DISTANCE	TO 3000 PSI MIN. CONCRETE; 0.875" MIN. EMBEDMENT; 3" MIN. EDGE DISTANCE	TO HOLLOW BLOCK; 0.875" MIN. EMBEDMENT; 3" MIN. EDGE DISTANCE	1/4" LAG SCREW TO G=0.55 MIN WOOD; 1.5" MIN. EMBEDMENT; 0.75" MIN. EDGE DISTANCE	5/16" LAG SCREW TO G=0.42 MIN WOOD; 2" MIN. EMBEDMENT; 0.75" MIN. EDGE DISTANCE	#14 WOOD SCREW TO G=0.55 MIN WOOD; 1.5" MIN. EMBEDMENT; 0.75" MIN. EDGE DISTANCE	#14 316 SS SMS W/ FULL THREAD PENETRATION (OR 1/4-20 316 SS THRU-BOLT) W/ 5/8" WASHER TO 0.125" MIN. 6063-T5 ALUM; 0.5" MIN. EDGE DISTANCE	#14 316 SS SMS W/ FULL THREAD PENETRATION (OR 1/4-20 316 SS THRU-BOLT) W/ 5/8" WASHER TO 0.25" MIN. 6063-T5 ALUM; 0.5" MIN. EDGE DISTANCE	3/8" POWERS WEDGE BOLT TO 3000 PSI MIN. CONCRETE; 3.5" MIN. EMBEDMENT; 4.5" MIN. EDGE DISTANCE	#14 316 SS SMS W/ FULL THREAD PENETRATION (OR 1/4-20 316 SS THRU-BOLT) W/ 5/8" WASHER TO 0.125" MIN. A36 STEEL; 0.5" MIN. EDGE DISTANCE	#14 316 SS SMS W/ FULL THREAD PENETRATION (OR 1/4-20 316 SS THRU-BOLT) W/ 5/8" WASHER TO 0.1875" MIN. A36 STEEL; 0.5" MIN. EDGE DISTANCE	#14 316 SS SMS W/ FULL THREAD PENETRATION (OR 1/4-20 316 SS THRU-BOLT) W/ 5/8" WASHER TO 0.25" MIN. A36 STEEL; 0.5" MIN. EDGE DISTANCE	#14 316 SS SMS W/ FULL THREAD PENETRATION (OR 1/4-20 316 SS THRU-BOLT) W/ 5/8" WASHER TO 0.5" MIN. A36 STEEL; 0.5" MIN. EDGE DISTANCE
96"	+/- 40 PSF	631.0 LB/FT	284.2 LB/FT	4.0"	4.0"	4.0"	4.0"	4.0"	4.0"	4.0"	4.0"	3.0"	2.6"	3.2"	4.0"	4.0"	4.0"	4.0"	4.0"	4.0"	4.0"
	+/- 50 PSF	831.8 LB/FT	367.4 LB/FT	4.0"	4.0"	4.0"	4.0"		4.0"	4.0"	3.2"	2.3"		2.4"	3.8"	4.0"	4.0"	4.0"	4.0"	4.0"	4.0"
	+/- 60 PSF	1033.0 LB/FT	451.6 LB/FT		4.0"	4.0"	4.0"			4.0"					3.1"	4.0"	4.0"	4.0"	4.0"	4.0"	4.0"
	+/- 70 PSF	1234.6 LB/FT	536.8 LB/FT		3.3"	4.0"	4.0"			3.8"					2.6"	4.0"	4.0"	4.0"	4.0"	4.0"	4.0"
	+/- 80 PSF	1436.6 LB/FT	623.0 LB/FT			4.0"	3.9"			3.3"					2.2"	3.8"	4.0"	4.0"	4.0"	4.0"	4.0"
	+/- 90 PSF	1638.9 LB/FT	710.2 LB/FT			4.0"										3.4"	4.0"	4.0"	4.0"	4.0"	4.0"
	+/- 104 PSF	1922.8 LB/FT	834.0 LB/FT													2.9"	4.0"	4.0"	4.0"	4.0"	4.0"
108"	+/- 30 PSF	573.3 LB/FT	243.4 LB/FT	4.0"	4.0"	4.0"	4.0"	4.0"	4.0"	4.0"	4.0"	3.4"	2.8"	3.6"	4.0"	4.0"	4.0"	4.0"	4.0"	4.0"	4.0"
	+/- 40 PSF	809.6 LB/FT	336.6 LB/FT	4.0"	4.0"	4.0"	4.0"		4.0"	4.0"	3.3"	2.4"	2.0"	2.5"	4.0"	4.0"	4.0"	4.0"	4.0"	4.0"	4.0"
	+/- 50 PSF	1046.3 LB/FT	431.2 LB/FT		4.0"	4.0"	4.0"			4.0"					3.2"	4.0"	4.0"	4.0"	4.0"	4.0"	4.0"
	+/- 60 PSF	1283.6 LB/FT	527.0 LB/FT		3.3"	4.0"	4.0"			3.7"					2.6"	4.0"	4.0"	4.0"	4.0"	4.0"	4.0"
	+/- 70 PSF	1521.3 LB/FT	624.1 LB/FT			4.0"				3.1"					2.2"	3.7"	4.0"	4.0"	4.0"	4.0"	4.0"
	+/- 80 PSF	1759.5 LB/FT	722.5 LB/FT			4.0"										3.2"	4.0"	4.0"	4.0"	4.0"	4.0"
	+/- 90 PSF	1998.2 LB/FT	822.1 LB/FT													2.8"	4.0"	4.0"	4.0"	4.0"	4.0"
	+/- 98 PSF	2189.5 LB/FT	902.7 LB/FT													2.6"	4.0"	4.0"	4.0"	4.0"	4.0"
120"	+/- 30 PSF	710.7 LB/FT	281.7 LB/FT	4.0"	4.0"	4.0"	4.0"	4.0"	4.0"	4.0"	3.8"	2.7"	2.3"	2.9"	4.0"	4.0"	4.0"	4.0"	4.0"	4.0"	4.0"
	+/- 40 PSF	984.5 LB/FT	386.2 LB/FT		4.0"	4.0"	4.0"		4.0"	4.0"				2.1"	3.5"	4.0"	4.0"	4.0"	4.0"	4.0"	4.0"
	+/- 50 PSF	1258.9 LB/FT	492.2 LB/FT		3.4"	4.0"	4.0"			3.8"					2.7"	4.0"	4.0"	4.0"	4.0"	4.0"	4.0"
	+/- 60 PSF	1534.0 LB/FT	599.9 LB/FT			4.0"				3.1"					2.2"	3.7"	4.0"	4.0"	4.0"	4.0"	4.0"
	+/- 70 PSF	1809.6 LB/FT	709.1 LB/FT			4.0"										3.1"	4.0"	4.0"	4.0"	4.0"	4.0"
	+/- 80 PSF	2085.9 LB/FT	820.0 LB/FT													2.7"	4.0"	4.0"	4.0"	4.0"	4.0"
	+/- 90 PSF	2362.8 LB/FT	932.4 LB/FT													2.4"	4.0"	4.0"	4.0"	4.0"	4.0"
	+/- 93 PSF	2446.0 LB/FT	966.4 LB/FT													2.3"	4.0"	4.0"	4.0"	4.0"	4.0"
132"	+/- 20 PSF	534.0 LB/FT	204.4 LB/FT	4.0"	4.0"	4.0"	4.0"	4.0"	4.0"	4.0"	4.0"	3.7"	3.1"	3.9"	4.0"	4.0"	4.0"	4.0"	4.0"	4.0"	4.0"
	+/- 30 PSF	846.1 LB/FT	318.2 LB/FT	4.0"	4.0"	4.0"	4.0"		4.0"	4.0"	3.3"	2.3"		2.5"	4.0"	4.0"	4.0"	4.0"	4.0"	4.0"	4.0"
	+/- 40 PSF	1159.1 LB/FT	434.0 LB/FT		3.7"	4.0"	4.0"			4.0"					3.0"	4.0"	4.0"	4.0"	4.0"	4.0"	4.0"
	+/- 50 PSF	1472.8 LB/FT	551.8 LB/FT			4.0"	3.9"			3.3"					2.4"	3.9"	4.0"	4.0"	4.0"	4.0"	4.0"
	+/- 60 PSF	1789.2 LB/FT	676.1 LB/FT			4.0"										3.2"	4.0"	4.0"	4.0"	4.0"	4.0"
	+/- 70 PSF	2102.7 LB/FT	793.2 LB/FT													2.7"	4.0"	4.0"	4.0"	4.0"	4.0"
	+/- 80 PSF	2422.1 LB/FT	925.1 LB/FT													2.4"	4.0"	4.0"	4.0"	4.0"	4.0"
	+/- 90 PSF	2735.6 LB/FT	1042.4 LB/FT													2.1"	4.0"	4.0"	4.0"	4.0"	4.0"
144"	+/- 20 PSF	628.8 LB/FT	228.7 LB/FT	4.0"	4.0"	4.0"	4.0"	4.0"	4.0"	4.0"	4.0"	3.1"	2.6"	3.3"	4.0"	4.0"	4.0"	4.0"	4.0"	4.0"	4.0"
	+/- 30 PSF	981.5 LB/FT	353.6 LB/FT	4.0"	4.0"	4.0"	4.0"		4.0"	4.0"				2.1"	3.6"	4.0"	4.0"	4.0"	4.0"	4.0"	4.0"
	+/- 40 PSF	1335.2 LB/FT	481.0 LB/FT		3.2"	4.0"	4.0"			3.7"					2.7"	4.0"	4.0"	4.0"	4.0"	4.0"	4.0"
	+/- 50 PSF	1689.9 LB/FT	610.7 LB/FT			4.0"									2.1"	3.4"	4.0"	4.0"	4.0"	4.0"	4.0"
	+/- 60 PSF	2050.3 LB/FT	754.0 LB/FT													2.8"	4.0"	4.0"	4.0"	4.0"	4.0"
	+/- 70 PSF	2402.2 LB/FT	877.1 LB/FT													2.4"	4.0"	4.0"	4.0"	4.0"	4.0"
	+/- 86 PSF	2974.8 LB/FT	1097.0 LB/FT														4.0"	4.0"	4.0"	4.0"	4.0"
156"	+/- 20 PSF	723.6 LB/FT	252.7 LB/FT	4.0"	4.0"	4.0"	4.0"	4.0"	4.0"	4.0"	3.9"	2.7"	2.3"	2.9"	4.0"	4.0"	4.0"	4.0"	4.0"	4.0"	4.0"
	+/- 30 PSF	1118.6 LB/FT	389.5 LB/FT		3.9"	4.0"	4.0"			4.0"					3.3"	4.0"	4.0"	4.0"	4.0"	4.0"	4.0"
	+/- 40 PSF	1515.0 LB/FT	529.4 LB/FT			4.0"	3.9"			3.3"					2.4"	3.9"	4.0"	4.0"	4.0"	4.0"	4.0"
	+/- 50 PSF	1912.6 LB/FT	672.4 LB/FT			3.9"										3.1"	4.0"	4.0"	4.0"	4.0"	4.0"
	+/- 60 PSF	2318.3 LB/FT	834.4 LB/FT													2.5"	4.0"	4.0"	4.0"	4.0"	4.0"
	+/- 70 PSF	2711.8 LB/FT	967.6 LB/FT													2.1"	4.0"	4.0"	4.0"	4.0"	4.0"
	+/- 78 PSF	3032.8 LB/FT	1089.0 LB/FT														4.0"	4.0"	4.0"	4.0"	4.0"

V:\Projects\14-1323 Magnum III (Security Star) Slat Shutter Florida Product Approval-I.SWP\2017 FBC Update\14-1323e-Dwg-FL17344.1.dwg
08/11/2017 - 10:00am rickn

ANCHOR SCHEDULE: : INDICATES VALUES NOT APPROVED FOR USE.

INTERIOR MOUNT: MAGNUM 3.57 END RETENTION SHUTTER WITH SINGLE WALL SLATS (CONTINUED)

ANCHOR NOTES: SEE SHEET 5 FOR ANCHOR NOTES.

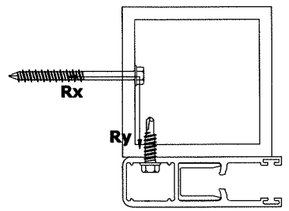

MAXIMUM SPACING (O.C.)

SLAT SPAN	DESIGN PRESSURE	Rx	Ry	1/4" ELCO ULTRACON TO 2846 PSI MIN. CONCRETE; 1.75" MIN. EMBEDMENT; 2.5" MIN. EDGE DISTANCE	1/4" SS ITW TAPCON TO 3192 PSI MIN. CONCRETE; 1.75" MIN. EMBEDMENT; 2.5" MIN. EDGE DISTANCE	5/16" ITW TAPCON: TO 2899 PSI MIN. CONCRETE; 2.25" MIN. EMBEDMENT; 3.125" MIN. EDGE DISTANCE	5/16" ITW TAPCON: TO GROUT-FILLED CONCRETE BLOCK; 2.25" MIN. EMBEDMENT; 4" MIN. EDGE DISTANCE	5/16" ITW TAPCON: TO HOLLOW CONCRETE BLOCK; 1.75" MIN. EMBEDMENT; 4" MIN. EDGE DISTANCE	1/4" POWERS POWER-BOLT TO 3000 PSI MIN. CONCRETE; 2.5" MIN. EMBEDMENT; 3" MIN. EDGE DISTANCE	1/4" ALL-POINTS SOLID-SET: TO 3000 PSI MIN. CONCRETE; 0.875" MIN. EMBEDMENT; 3" MIN. EDGE DISTANCE	1/4" ALL-POINTS SOLID-SET: TO HOLLOW BLOCK; 0.875" MIN. EMBEDMENT; 3" MIN. EDGE DISTANCE	1/4" LAG SCREW TO G=0.55 MIN WOOD; 1.5" MIN. EMBEDMENT; 0.75" MIN. EDGE DISTANCE	5/16" LAG SCREW TO G=0.42 MIN WOOD; 2" MIN. EMBEDMENT; 0.75" MIN. EDGE DISTANCE	#14 WOOD SCREW TO G=0.55 MIN WOOD; 1.5" MIN. EMBEDMENT; 0.75" MIN. EDGE DISTANCE	#14 316 SS SMS W/ FULL THREAD PENETRATION (OR 1/4-20 316 SS THRU-BOLT) W/ 5/8" WASHER TO 0.125" MIN. 6063-T5 ALUM; 0.5" MIN. EDGE DISTANCE	#14 316 SS SMS W/ FULL THREAD PENETRATION (OR 1/4-20 316 SS THRU-BOLT) W/ 5/8" WASHER TO 0.25" MIN. 6063-T5 ALUM; 0.5" MIN. EDGE DISTANCE	3/8" POWERS WEDGE BOLT TO 3000 PSI MIN. CONCRETE; 3.5" MIN. EMBEDMENT; 4.5" MIN. EDGE DISTANCE	#14 316 SS SMS W/ FULL THREAD PENETRATION (OR 1/4-20 316 SS THRU-BOLT) W/ 5/8" WASHER TO 0.125" MIN. A36 STEEL; 0.5" MIN. EDGE DISTANCE	#14 316 SS SMS W/ FULL THREAD PENETRATION (OR 1/4-20 316 SS THRU-BOLT) W/ 5/8" WASHER TO 0.1875" MIN. A36 STEEL; 0.5" MIN. EDGE DISTANCE	#14 316 SS SMS W/ FULL THREAD PENETRATION (OR 1/4-20 316 SS THRU-BOLT) W/ 5/8" WASHER TO 0.25" MIN. A36 STEEL; 0.5" MIN. EDGE DISTANCE	#14 316 SMS W/ THRE PENETR (OR 1/4 316-S THRU-B W/ 5/ WASHE 0.5" MIN STEE 0.5" M EDG DISTAN
168"	+/- 20 PSF	818.9 LB/FT	276.4 LB/FT	4.0"	4.0"	4.0"	4.0"	3.8"	4.0"	4.0"	3.5"	2.4"	2.0"	2.6"	4.0"	4.0"	4.0"	4.0"	4.0"	4.0"	4.0'
	+/- 30 PSF	1257.8 LB/FT	425.4 LB/FT		3.5"	4.0"	4.0"			4.0"					2.9"	4.0"	4.0"	4.0"	4.0"	4.0"	4.0'
	+/- 40 PSF	1698.4 LB/FT	578.4 LB/FT			4.0"									2.2"	3.5"	4.0"	4.0"	4.0"	4.0"	4.0'
	+/- 50 PSF	2140.8 LB/FT	735.3 LB/FT													2.7"	4.0"	4.0"	4.0"	4.0"	4.0'
	+/- 60 PSF	2594.0 LB/FT	918.0 LB/FT													2.3"	4.0"	4.0"	4.0"	4.0"	4.0'
	+/- 72 PSF	3119.6 LB/FT	1094.2 LB/FT														4.0"	4.0"	4.0"	4.0"	4.0'
180"	+/- 10 PSF	433.2 LB/FT	143.5 LB/FT	4.0"	4.0"	4.0"	4.0"	4.0"	4.0"	4.0"	4.0"	4.0"	3.8"	4.0"	4.0"	4.0"	4.0"	4.0"	4.0"	4.0"	4.0'
	+/- 20 PSF	915.3 LB/FT	300.0 LB/FT	4.0"	4.0"	4.0"	4.0"		4.0"	4.0"	3.1"	2.2"		2.3"	4.0"	4.0"	4.0"	4.0"	4.0"	4.0"	4.0'
	+/- 30 PSF	1399.6 LB/FT	461.6 LB/FT		3.2"	4.0"	4.0"			3.6"					2.7"	4.0"	4.0"	4.0"	4.0"	4.0"	4.0'
	+/- 40 PSF	1886.1 LB/FT	628.1 LB/FT			4.0"										3.1"	4.0"	4.0"	4.0"	4.0"	4.0'
	+/- 50 PSF	2374.7 LB/FT	799.6 LB/FT													2.5"	4.0"	4.0"	4.0"	4.0"	4.0'
	+/- 67 PSF	3210.1 LB/FT	1102.4 LB/FT														4.0"	4.0"	4.0"	4.0"	4.0'
192"	+/- 10 PSF	484.7 LB/FT	155.3 LB/FT	4.0"	4.0"	4.0"	4.0"	4.0"	4.0"	4.0"	4.0"	4.0"	3.4"	4.0"	4.0"	4.0"	4.0"	4.0"	4.0"	4.0"	4.0'
	+/- 20 PSF	1013.1 LB/FT	323.6 LB/FT	4.0"	4.0"	4.0"	4.0"		4.0"	4.0"				2.1"	3.8"	4.0"	4.0"	4.0"	4.0"	4.0"	4.0'
	+/- 30 PSF	1544.3 LB/FT	498.2 LB/FT			4.0"	3.8"			3.3"					2.5"	3.9"	4.0"	4.0"	4.0"	4.0"	4.0'
	+/- 40 PSF	2078.2 LB/FT	678.9 LB/FT													2.9"	4.0"	4.0"	4.0"	4.0"	4.0'
	+/- 50 PSF	2614.8 LB/FT	865.7 LB/FT													2.3"	4.0"	4.0"	4.0"	4.0"	4.0'
	+/- 62 PSF	3262.0 LB/FT	1097.9 LB/FT														4.0"	4.0"	4.0"	4.0"	4.0'
204"	+/- 10 PSF	536.5 LB/FT	166.9 LB/FT	4.0"	4.0"	4.0"	4.0"	4.0"	4.0"	4.0"	4.0"	3.7"	3.1"	4.0"	4.0"	4.0"	4.0"	4.0"	4.0"	4.0"	4.0'
	+/- 20 PSF	1112.6 LB/FT	347.3 LB/FT		4.0"	4.0"	4.0"		4.0"	4.0"					3.5"	4.0"	4.0"	4.0"	4.0"	4.0"	4.0'
	+/- 30 PSF	1692.2 LB/FT	535.3 LB/FT			4.0"				3.0"					2.3"	3.5"	4.0"	4.0"	4.0"	4.0"	4.0'
	+/- 40 PSF	2275.1 LB/FT	730.8 LB/FT													2.6"	4.0"	4.0"	4.0"	4.0"	4.0'
	+/- 50 PSF	2861.2 LB/FT	933.8 LB/FT													2.1"	4.0"	4.0"	4.0"	4.0"	4.0'
	+/- 58 PSF	3332.3 LB/FT	1101.4 LB/FT														4.0"	4.0"	4.0"	4.0"	4.0'
216"	+/- 10 PSF	588.8 LB/FT	178.5 LB/FT	4.0"	4.0"	4.0"	4.0"	4.0"	4.0"	4.0"	4.0"	3.4"	2.8"	3.6"	4.0"	4.0"	4.0"	4.0"	4.0"	4.0"	4.0'
	+/- 20 PSF	1214.0 LB/FT	371.3 LB/FT		3.7"	4.0"	4.0"			4.0"					3.2"	4.0"	4.0"	4.0"	4.0"	4.0"	4.0'
	+/- 30 PSF	1843.3 LB/FT	573.2 LB/FT			4.0"									2.1"	3.3"	4.0"	4.0"	4.0"	4.0"	4.0'
	+/- 40 PSF	2476.7 LB/FT	784.1 LB/FT													2.4"	4.0"	4.0"	4.0"	4.0"	4.0'
	+/- 50 PSF	3113.9 LB/FT	1004.0 LB/FT														4.0"	4.0"	4.0"	4.0"	4.0'
	+/- 55 PSF	3433.9 LB/FT	1117.3 LB/FT														4.0"	4.0"	4.0"	4.0"	4.0'

08/11/2017 - 10:00am nickn V:\Projects\14-1323 Magnum III (Security Star) Slat Shutter Florida Product Approval-I.SWP\2017 FBC Update\14-1323e-Dwg-FL17344.1.dwg

ANCHOR SCHEDULE: : INDICATES VALUES NOT APPROVED FOR USE.

WALL MOUNT: SNAP RAIL END RETENTION SHUTTER WITH SINGLE WALL SLATS

ANCHOR NOTES: SEE SHEET 5 FOR ANCHOR NOTES.

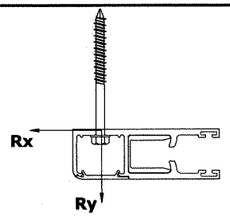

SLAT SPAN	DESIGN PRESSURE	Rx	Ry	MAXIMUM SPACING (O.C.)																	
						5/16" ITW TAPCON				1/4" ALL-POINTS SOLID-SET											
				1/4" ELCO ULTRACON TO 2846 PSI MIN. CONCRETE; 1.75" MIN. EMBEDMENT; 2.5" MIN. EDGE DISTANCE	1/4" SS ITW TAPCON TO 3192 PSI MIN. CONCRETE; 1.75" MIN. EMBEDMENT; 2.5" MIN. EDGE DISTANCE	TO 2899 PSI MIN. CONCRETE; 2.25" MIN. EMBEDMENT; 3.125" MIN. EDGE DISTANCE	TO GROUT-FILLED CONCRETE BLOCK; 2.25" MIN. EMBEDMENT; 4" MIN. EDGE DISTANCE	TO HOLLOW CONCRETE BLOCK; 1.75" MIN. EMBEDMENT; 4" MIN. EDGE DISTANCE	1/4" POWERS POWER-BOLT TO 3000 PSI MIN. CONCRETE; 2.5" MIN. EMBEDMENT; 3" MIN. EDGE DISTANCE	TO 3000 PSI MIN. CONCRETE; 0.875" MIN. EMBEDMENT; 3" MIN. EDGE DISTANCE	TO HOLLOW BLOCK; 0.875" MIN. EMBEDMENT; 3" MIN. EDGE DISTANCE	1/4" LAG SCREW TO G=0.55 MIN WOOD; 1.5" MIN. EMBEDMENT; 0.75" MIN. EDGE DISTANCE	5/16" LAG SCREW TO G=0.42 MIN WOOD; 2" MIN. EMBEDMENT; 0.75" MIN. EDGE DISTANCE	#14 WOOD SCREW TO G=0.55 MIN WOOD; 1.5" MIN. EMBEDMENT; 0.75" MIN. EDGE DISTANCE	#14 316 SS SMS W/ FULL THREAD PENETRATION (OR 1/4-20 316 SS THRU-BOLT) W/ 5/8" WASHER TO 0.125" MIN. 6063-T5 ALUM; 0.5" MIN. EDGE DISTANCE	#14 316 SS SMS W/ FULL THREAD PENETRATION (OR 1/4-20 316 SS THRU-BOLT) W/ 5/8" WASHER TO 0.25" MIN. 6063-T5 ALUM; 0.5" MIN. EDGE DISTANCE	3/8" POWERS WEDGE BOLT TO 3000 PSI MIN. CONCRETE; 3.5" MIN. EMBEDMENT; 4.5" MIN. EDGE DISTANCE	#14 316 SS SMS W/ FULL THREAD PENETRATION (OR 1/4-20 316 SS THRU-BOLT) W/ 5/8" WASHER TO 0.125" MIN. A36 STEEL; 0.5" MIN. EDGE DISTANCE	#14 316 SS SMS W/ FULL THREAD PENETRATION (OR 1/4-20 316 SS THRU-BOLT) W/ 5/8" WASHER TO 0.1875" MIN. A36 STEEL; 0.5" MIN. EDGE DISTANCE	#14 316 SS SMS W/ FULL THREAD PENETRATION (OR 1/4-20 316 SS THRU-BOLT) W/ 5/8" WASHER TO 0.25" MIN. A36 STEEL; 0.5" MIN. EDGE DISTANCE	#14 316 SS SMS W/ FULL THREAD PENETRATION (OR 1/4-20 316 SS THRU-BOLT) W/ 5/8" WASHER TO 0.5" MIN. A36 STEEL; 0.5" MIN. EDGE DISTANCE
48"	+/- 40 PSF	0.0 LB/FT	80.0 LB/FT	4.0"	4.0"	4.0"	4.0"	4.0"	4.0"	4.0"	4.0"	4.0"	4.0"	4.0"	4.0"	4.0"	4.0"	4.0"	4.0"	4.0"	4.0"
	+/- 50 PSF	0.0 LB/FT	100.0 LB/FT	4.0"	4.0"	4.0"	4.0"	4.0"	4.0"	4.0"	4.0"	4.0"	4.0"	4.0"	4.0"	4.0"	4.0"	4.0"	4.0"	4.0"	4.0"
	+/- 60 PSF	0.0 LB/FT	120.0 LB/FT	4.0"	4.0"	4.0"	4.0"	4.0"	4.0"	4.0"	4.0"	4.0"	4.0"	4.0"	4.0"	4.0"	4.0"	4.0"	4.0"	4.0"	4.0"
	+/- 70 PSF	0.0 LB/FT	140.0 LB/FT	4.0"	4.0"	4.0"	4.0"	4.0"	4.0"	4.0"	4.0"	4.0"	4.0"	4.0"	4.0"	4.0"	4.0"	4.0"	4.0"	4.0"	4.0"
	+/- 80 PSF	0.0 LB/FT	160.0 LB/FT	4.0"	4.0"	4.0"	4.0"	4.0"	4.0"	4.0"	4.0"	4.0"	4.0"	4.0"	4.0"	4.0"	4.0"	4.0"	4.0"	4.0"	4.0"
	+/- 90 PSF	0.0 LB/FT	180.0 LB/FT	4.0"	4.0"	4.0"	4.0"	4.0"	4.0"	4.0"	4.0"	4.0"	4.0"	4.0"	4.0"	4.0"	4.0"	4.0"	4.0"	4.0"	4.0"
	+/- 100 PSF	0.0 LB/FT	200.0 LB/FT	4.0"	4.0"	4.0"	4.0"	4.0"	4.0"	4.0"	4.0"	4.0"	4.0"	4.0"	4.0"	4.0"	4.0"	4.0"	4.0"	4.0"	4.0"
	+/- 110 PSF	1.2 LB/FT	220.5 LB/FT	4.0"	4.0"	4.0"	4.0"	4.0"	4.0"	4.0"	4.0"	4.0"	4.0"	4.0"	4.0"	4.0"	4.0"	4.0"	4.0"	4.0"	4.0"
	+/- 120 PSF	51.9 LB/FT	260.2 LB/FT	4.0"	4.0"	4.0"	4.0"	4.0"	4.0"	4.0"	4.0"	4.0"	4.0"	4.0"	4.0"	4.0"	4.0"	4.0"	4.0"	4.0"	4.0"
	+/- 130 PSF	102.5 LB/FT	300.4 LB/FT	4.0"	4.0"	4.0"	4.0"	4.0"	4.0"	4.0"	4.0"	4.0"	4.0"	4.0"	4.0"	4.0"	4.0"	4.0"	4.0"	4.0"	4.0"
60"	+/- 40 PSF	0.0 LB/FT	100.0 LB/FT	4.0"	4.0"	4.0"	4.0"	4.0"	4.0"	4.0"	4.0"	4.0"	4.0"	4.0"	4.0"	4.0"	4.0"	4.0"	4.0"	4.0"	4.0"
	+/- 50 PSF	0.0 LB/FT	125.0 LB/FT	4.0"	4.0"	4.0"	4.0"	4.0"	4.0"	4.0"	4.0"	4.0"	4.0"	4.0"	4.0"	4.0"	4.0"	4.0"	4.0"	4.0"	4.0"
	+/- 60 PSF	68.7 LB/FT	173.8 LB/FT	4.0"	4.0"	4.0"	4.0"	4.0"	4.0"	4.0"	4.0"	4.0"	4.0"	4.0"	4.0"	4.0"	4.0"	4.0"	4.0"	4.0"	4.0"
	+/- 70 PSF	140.0 LB/FT	224.0 LB/FT	4.0"	4.0"	4.0"	4.0"	4.0"	4.0"	4.0"	4.0"	4.0"	4.0"	4.0"	4.0"	4.0"	4.0"	4.0"	4.0"	4.0"	4.0"
	+/- 84 PSF	239.5 LB/FT	295.2 LB/FT	4.0"	4.0"	4.0"	4.0"	4.0"	4.0"	4.0"	4.0"	4.0"	4.0"	4.0"	4.0"	4.0"	4.0"	4.0"	4.0"	4.0"	4.0"
72"	+/- 40 PSF	125.9 LB/FT	159.9 LB/FT	4.0"	4.0"	4.0"	4.0"	4.0"	4.0"	4.0"	4.0"	4.0"	4.0"	4.0"	4.0"	4.0"	4.0"	4.0"	4.0"	4.0"	4.0"
	+/- 50 PSF	220.0 LB/FT	220.6 LB/FT	4.0"	4.0"	4.0"	4.0"	4.0"	4.0"	4.0"	4.0"	4.0"	4.0"	4.0"	4.0"	4.0"	4.0"	4.0"	4.0"	4.0"	4.0"
	+/- 68 PSF	389.0 LB/FT	331.4 LB/FT	4.0"	4.0"	4.0"	4.0"	4.0"	4.0"	4.0"	4.0"	4.0"	3.9"	4.0"	4.0"	4.0"	4.0"	4.0"	4.0"	4.0"	4.0"
84"	+/- 40 PSF	291.3 LB/FT	226.8 LB/FT	4.0"	4.0"	4.0"	4.0"	4.0"	4.0"	4.0"	4.0"	4.0"	4.0"	4.0"	4.0"	4.0"	4.0"	4.0"	4.0"	4.0"	4.0"
	+/- 50 PSF	410.1 LB/FT	298.7 LB/FT	4.0"	4.0"	4.0"	4.0"	4.0"	4.0"	4.0"	4.0"	4.0"	3.7"	4.0"	4.0"	4.0"	4.0"	4.0"	4.0"	4.0"	4.0"
	+/- 60 PSF	528.7 LB/FT	371.4 LB/FT	4.0"	4.0"	4.0"	4.0"	4.0"	4.0"	4.0"	4.0"	3.4"	2.9"	3.5"	4.0"	4.0"	4.0"	4.0"	4.0"	4.0"	4.0"
96"	+/- 40 PSF	441.4 LB/FT	284.2 LB/FT	4.0"	4.0"	4.0"	4.0"	4.0"	4.0"	4.0"	4.0"	4.0"	3.5"	4.0"	4.0"	4.0"	4.0"	4.0"	4.0"	4.0"	4.0"
	+/- 50 PSF	586.8 LB/FT	367.4 LB/FT	4.0"	4.0"	4.0"	4.0"	3.9"	4.0"	4.0"	4.0"	3.1"	2.7"	3.3"	4.0"	4.0"	4.0"	4.0"	4.0"	4.0"	4.0"
	+/- 57 PSF	688.3 LB/FT	426.2 LB/FT	4.0"	4.0"	4.0"	4.0"		4.0"	4.0"	3.4"	2.7"	2.3"	2.8"	3.8"	4.0"	4.0"	4.0"	4.0"	4.0"	4.0"
108"	+/- 40 PSF	585.0 LB/FT	336.6 LB/FT	4.0"	4.0"	4.0"	4.0"	4.0"	4.0"	4.0"	4.0"	3.2"	2.7"	3.3"	4.0"	4.0"	4.0"	4.0"	4.0"	4.0"	4.0"
	+/- 50 PSF	758.7 LB/FT	431.2 LB/FT	4.0"	4.0"	4.0"	4.0"		4.0"	4.0"	3.2"	2.5"	2.1"	2.6"	3.6"	4.0"	4.0"	4.0"	4.0"	4.0"	4.0"
	+/- 54 PSF	828.1 LB/FT	469.3 LB/FT	4.0"	4.0"	4.0"	4.0"		4.0"	4.0"		2.2"		2.4"	3.3"	4.0"	4.0"	4.0"	4.0"	4.0"	4.0"
120"	+/- 30 PSF	522.8 LB/FT	281.7 LB/FT	4.0"	4.0"	4.0"	4.0"	4.0"	4.0"	4.0"	4.0"	3.6"	3.1"	3.8"	4.0"	4.0"	4.0"	4.0"	4.0"	4.0"	4.0"
	+/- 40 PSF	726.9 LB/FT	386.2 LB/FT	4.0"	4.0"	4.0"	4.0"		4.0"	4.0"	3.4"	2.6"	2.2"	2.7"	3.9"	4.0"	4.0"	4.0"	4.0"	4.0"	4.0"
	+/- 50 PSF	930.6 LB/FT	492.2 LB/FT		4.0"	4.0"	4.0"		4.0"	4.0"		2.0"		2.1"	3.1"	4.0"	4.0"	4.0"	4.0"	4.0"	4.0"
	+/- 52 PSF	971.3 LB/FT	513.6 LB/FT		4.0"	4.0"	4.0"			4.0"				2.0"	2.9"	4.0"	4.0"	4.0"	4.0"	4.0"	4.0"
132"	+/- 30 PSF	633.9 LB/FT	318.2 LB/FT	4.0"	4.0"	4.0"	4.0"	4.0"	4.0"	4.0"	4.0"	3.0"	2.5"	3.1"	4.0"	4.0"	4.0"	4.0"	4.0"	4.0"	4.0"
	+/- 40 PSF	869.6 LB/FT	434.0 LB/FT	4.0"	4.0"	4.0"	4.0"		4.0"	4.0"		2.2"		2.3"	3.4"	4.0"	4.0"	4.0"	4.0"	4.0"	4.0"
	+/- 50 PSF	1104.8 LB/FT	551.8 LB/FT		3.6"	4.0"	4.0"			4.0"					2.7"	4.0"	4.0"	4.0"	4.0"	4.0"	4.0"
144"	+/- 20 PSF	476.3 LB/FT	228.7 LB/FT	4.0"	4.0"	4.0"	4.0"	4.0"	4.0"	4.0"	4.0"	4.0"	3.4"	4.0"	4.0"	4.0"	4.0"	4.0"	4.0"	4.0"	4.0"
	+/- 30 PSF	745.6 LB/FT	353.6 LB/FT	4.0"	4.0"	4.0"	4.0"		4.0"	4.0"	3.5"	2.6"	2.2"	2.7"	4.0"	4.0"	4.0"	4.0"	4.0"	4.0"	4.0"
	+/- 40 PSF	1014.4 LB/FT	481.0 LB/FT		4.0"	4.0"	4.0"			4.0"					3.0"	4.0"	4.0"	4.0"	4.0"	4.0"	4.0"
	+/- 50 PSF	1282.6 LB/FT	610.7 LB/FT		3.1"	4.0"	4.0"			3.5"					2.4"	4.0"	4.0"	4.0"	4.0"	4.0"	4.0"

FRANK L. BENNARDO, P.E.
#PE0046549
08/11/2017
No. PE0046549
STATE OF FLORIDA
PROFESSIONAL ENGINEER

ENGINEERING EXPRESS®
CORPORATE OFFICE
160 SW 12th AVE, SUITE 106
DEERFIELD BEACH, FL 33442
P: (954) 354-0660 F: (954) 354-0943
E: HELLO@ENGINEERINGEXPRESS.COM
ENGINEERINGEXPRESS.COM
CERT OF AUTH #9985

ALUTECH UNITED, INC.
117 DIXON STREET
SELBYVILLE, DE 19975
PHONE: 302 - 436 - 6005 FAX: 302 - 436 - 5100

MAGNUM 3.57 SECURITY STAR
ROLL DOWN SHUTTER
FL17344.1

REMARKS	DRWN	CHKD	DATE
INIT ISSUE	CSL	TSB	10/13/14
ADD STEEL HOST	RWN	CSL	02/20/15
REV (2017 FBC)	RWN	FLB	8-11-17
-	-	-	-
-	-	-	-

THIS DOCUMENT IS THE PROPERTY OF FRANK L. BENNARDO, P.E. AND SHALL NOT BE REPRODUCED IN WHOLE OR IN PART WITHOUT WRITTEN PERMISSION OF FRANK L. BENNARDO, P.E. ** ALTERATIONS, ADDITIONS, HIGHLIGHTING, OR OTHER MARKINGS TO THIS DOCUMENT ARE NOT PERMITTED AND INVALIDATE OUR CERTIFICATION.

COPYRIGHT FRANK L. BENNARDO P.E.

14-1323

SCALE: -

PAGE DESCRIPTION:
-
-

V:\Projects\14-1323 Magnum III (Security Star) Slat Shutter Florida Product Approval-I.SWP\2017 FBC Update\14-1323e-Dwg-FL17344.1.dwg
08/11/2017 - 10:00am rickn

ANCHOR SCHEDULE: : INDICATES VALUES NOT APPROVED FOR USE.

BUILD-OUT MOUNT: SNAP RAIL END RETENTION SHUTTER WITH SINGLE WALL SLATS

ANCHOR NOTES: SEE SHEET 5 FOR ANCHOR NOTES.

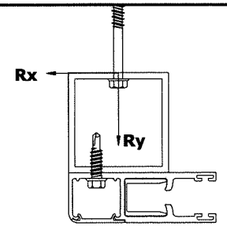

MAXIMUM SPACING (O.C.)

SLAT SPAN	DESIGN PRESSURE	Rx	Ry	1/4" ELCO ULTRACON TO 2846 PSI MIN. CONCRETE; 1.75" MIN. EMBEDMENT; 2.5" MIN. EDGE DISTANCE	1/4" SS ITW TAPCON TO 3192 PSI MIN. CONCRETE; 1.75" MIN. EMBEDMENT; 2.5" MIN. EDGE DISTANCE	5/16" ITW TAPCON: TO 2899 PSI MIN. CONCRETE; 2.25" MIN. EMBEDMENT; 3.125" MIN. EDGE DISTANCE	5/16" ITW TAPCON: TO GROUT-FILLED CONCRETE BLOCK; 2.25" MIN. EMBEDMENT; 4" MIN. EDGE DISTANCE	5/16" ITW TAPCON: TO HOLLOW CONCRETE BLOCK; 1.75" MIN. EMBEDMENT; 4" MIN. EDGE DISTANCE	1/4" POWERS POWER-BOLT TO 3000 PSI MIN. CONCRETE; 2.5" MIN. EMBEDMENT; 3" MIN. EDGE DISTANCE	1/4" ALL-POINTS SOLID-SET: TO 3000 PSI MIN. CONCRETE; 0.875" MIN. EMBEDMENT; 3" MIN. EDGE DISTANCE	1/4" ALL-POINTS SOLID-SET: TO HOLLOW BLOCK; 0.875" MIN. EMBEDMENT; 3" MIN. EDGE DISTANCE	1/4" LAG SCREW TO G=0.55 MIN WOOD; 1.5" MIN. EMBEDMENT; 0.75" MIN. EDGE DISTANCE	5/16" LAG SCREW TO G=0.42 MIN WOOD; 2" MIN. EMBEDMENT; 0.75" MIN. EDGE DISTANCE	#14 WOOD SCREW TO G=0.55 MIN WOOD; 1.5" MIN. EMBEDMENT; 0.75" MIN. EDGE DISTANCE	#14 316 SS SMS W/ FULL THREAD PENETRATION (OR 1/4-20 316 SS THRU-BOLT) W/ 5/8" WASHER TO 0.125" MIN. 6063-T5 ALUM; 0.5" MIN. EDGE DISTANCE	#14 316 SS SMS W/ FULL THREAD PENETRATION (OR 1/4-20 316 SS THRU-BOLT) W/ 5/8" WASHER TO 0.25" MIN. 6063-T5 ALUM; 0.5" MIN. EDGE DISTANCE	3/8" POWERS WEDGE BOLT TO 3000 PSI MIN. CONCRETE; 3.5" MIN. EMBEDMENT; 4.5" MIN. EDGE DISTANCE	#14 316 SS SMS W/ FULL THREAD PENETRATION (OR 1/4-20 316 SS THRU-BOLT) W/ 5/8" WASHER TO 0.125" MIN. A36 STEEL; 0.5" MIN. EDGE DISTANCE	#14 316 SS SMS W/ FULL THREAD PENETRATION (OR 1/4-20 316 SS THRU-BOLT) W/ 5/8" WASHER TO 0.1875" MIN. A36 STEEL; 0.5" MIN. EDGE DISTANCE	#14 316 SS SMS W/ FULL THREAD PENETRATION (OR 1/4-20 316 SS THRU-BOLT) W/ 5/8" WASHER TO 0.25" MIN. A36 STEEL; 0.5" MIN. EDGE DISTANCE	#14 316 SMS W/ THRE PENETR (OR 1/ 316 S THRU-B W/ 5/ WASHE 0.5" MIN STEE 0.5" M EDG DISTAN
48"	+/- 40 PSF	0.0 LB/FT	133.4 LB/FT	4.0"	4.0"	4.0"	4.0"	4.0"	4.0"	4.0"	4.0"	4.0"	4.0"	4.0"	4.0"	4.0"	4.0"	4.0"	4.0"	4.0"	4.0
	+/- 50 PSF	0.0 LB/FT	166.7 LB/FT	4.0"	4.0"	4.0"	4.0"	4.0"	4.0"	4.0"	4.0"	4.0"	4.0"	4.0"	4.0"	4.0"	4.0"	4.0"	4.0"	4.0"	4.0
	+/- 60 PSF	0.0 LB/FT	200.0 LB/FT	4.0"	4.0"	4.0"	4.0"	4.0"	4.0"	4.0"	4.0"	4.0"	4.0"	4.0"	4.0"	4.0"	4.0"	4.0"	4.0"	4.0"	4.0
	+/- 70 PSF	0.0 LB/FT	233.4 LB/FT	4.0"	4.0"	4.0"	4.0"	4.0"	4.0"	4.0"	4.0"	4.0"	4.0"	4.0"	4.0"	4.0"	4.0"	4.0"	4.0"	4.0"	4.0
	+/- 80 PSF	0.0 LB/FT	266.7 LB/FT	4.0"	4.0"	4.0"	4.0"	4.0"	4.0"	4.0"	4.0"	4.0"	4.0"	4.0"	4.0"	4.0"	4.0"	4.0"	4.0"	4.0"	4.0
	+/- 90 PSF	0.0 LB/FT	300.1 LB/FT	4.0"	4.0"	4.0"	4.0"	4.0"	4.0"	4.0"	4.0"	4.0"	4.0"	4.0"	4.0"	4.0"	4.0"	4.0"	4.0"	4.0"	4.0
	+/- 100 PSF	0.0 LB/FT	333.4 LB/FT	4.0"	4.0"	4.0"	4.0"	4.0"	4.0"	4.0"	4.0"	4.0"	4.0"	4.0"	4.0"	4.0"	4.0"	4.0"	4.0"	4.0"	4.0
	+/- 110 PSF	1.2 LB/FT	367.5 LB/FT	4.0"	4.0"	4.0"	4.0"	4.0"	4.0"	4.0"	4.0"	4.0"	4.0"	4.0"	4.0"	4.0"	4.0"	4.0"	4.0"	4.0"	4.0
	+/- 120 PSF	51.9 LB/FT	433.8 LB/FT	4.0"	4.0"	4.0"	4.0"	4.0"	4.0"	4.0"	4.0"	4.0"	4.0"	4.0"	4.0"	4.0"	4.0"	4.0"	4.0"	4.0"	4.0
	+/- 130 PSF	102.5 LB/FT	500.8 LB/FT	4.0"	4.0"	4.0"	4.0"	4.0"	4.0"	4.0"	4.0"	4.0"	4.0"	4.0"	4.0"	4.0"	4.0"	4.0"	4.0"	4.0"	4.0
60"	+/- 40 PSF	0.0 LB/FT	166.7 LB/FT	4.0"	4.0"	4.0"	4.0"	4.0"	4.0"	4.0"	4.0"	4.0"	4.0"	4.0"	4.0"	4.0"	4.0"	4.0"	4.0"	4.0"	4.0
	+/- 50 PSF	0.0 LB/FT	208.4 LB/FT	4.0"	4.0"	4.0"	4.0"	4.0"	4.0"	4.0"	4.0"	4.0"	4.0"	4.0"	4.0"	4.0"	4.0"	4.0"	4.0"	4.0"	4.0
	+/- 60 PSF	68.7 LB/FT	289.7 LB/FT	4.0"	4.0"	4.0"	4.0"	4.0"	4.0"	4.0"	4.0"	4.0"	4.0"	4.0"	4.0"	4.0"	4.0"	4.0"	4.0"	4.0"	4.0
	+/- 70 PSF	140.0 LB/FT	373.5 LB/FT	4.0"	4.0"	4.0"	4.0"	4.0"	4.0"	4.0"	4.0"	4.0"	4.0"	4.0"	4.0"	4.0"	4.0"	4.0"	4.0"	4.0"	4.0
	+/- 84 PSF	239.5 LB/FT	492.1 LB/FT	4.0"	4.0"	4.0"	4.0"	4.0"	4.0"	4.0"	4.0"	4.0"	4.0"	4.0"	4.0"	4.0"	4.0"	4.0"	4.0"	4.0"	4.0
72"	+/- 40 PSF	125.9 LB/FT	266.6 LB/FT	4.0"	4.0"	4.0"	4.0"	4.0"	4.0"	4.0"	4.0"	4.0"	4.0"	4.0"	4.0"	4.0"	4.0"	4.0"	4.0"	4.0"	4.0
	+/- 50 PSF	220.0 LB/FT	367.7 LB/FT	4.0"	4.0"	4.0"	4.0"	4.0"	4.0"	4.0"	4.0"	4.0"	4.0"	4.0"	4.0"	4.0"	4.0"	4.0"	4.0"	4.0"	4.0
	+/- 68 PSF	389.0 LB/FT	552.4 LB/FT	4.0"	4.0"	4.0"	4.0"		4.0"	4.0"	4.0"	3.9"	3.5"	3.9"	3.6"	4.0"	4.0"	4.0"	4.0"	4.0"	4.0
84"	+/- 40 PSF	291.3 LB/FT	378.0 LB/FT	4.0"	4.0"	4.0"	4.0"	4.0"	4.0"	4.0"	4.0"	4.0"	4.0"	4.0"	4.0"	4.0"	4.0"	4.0"	4.0"	4.0"	4.0
	+/- 50 PSF	410.1 LB/FT	497.9 LB/FT	4.0"	4.0"	4.0"	4.0"		4.0"	4.0"	4.0"	3.9"	3.4"	3.9"	3.8"	4.0"	4.0"	4.0"	4.0"	4.0"	4.0
	+/- 60 PSF	528.7 LB/FT	619.1 LB/FT	4.0"	4.0"	4.0"	4.0"		4.0"	4.0"	3.3"	3.1"	2.7"	3.1"	3.1"	4.0"	4.0"	4.0"	4.0"	4.0"	4.0
96"	+/- 30 PSF	295.7 LB/FT	336.9 LB/FT	4.0"	4.0"	4.0"	4.0"	4.0"	4.0"	4.0"	4.0"	4.0"	4.0"	4.0"	4.0"	4.0"	4.0"	4.0"	4.0"	4.0"	4.0
	+/- 40 PSF	441.4 LB/FT	473.8 LB/FT	4.0"	4.0"	4.0"	4.0"		4.0"	4.0"	4.0"	3.7"	3.3"	3.8"	3.9"	4.0"	4.0"	4.0"	4.0"	4.0"	4.0
	+/- 50 PSF	586.8 LB/FT	612.4 LB/FT	4.0"	4.0"	4.0"	4.0"		4.0"	4.0"	3.2"	2.8"	2.5"	2.9"	3.0"	4.0"	4.0"	4.0"	4.0"	4.0"	4.0
	+/- 57 PSF	688.3 LB/FT	710.5 LB/FT		4.0"	4.0"	4.0"			4.0"		2.4"	2.1"	2.5"	2.6"	4.0"	4.0"	4.0"	4.0"	4.0"	4.0
108"	+/- 30 PSF	411.0 LB/FT	405.7 LB/FT	4.0"	4.0"	4.0"	4.0"	4.0"	4.0"	4.0"	4.0"	4.0"	3.6"	4.0"	4.0"	4.0"	4.0"	4.0"	4.0"	4.0"	4.0
	+/- 40 PSF	585.0 LB/FT	561.2 LB/FT	4.0"	4.0"	4.0"	4.0"		4.0"	4.0"	3.3"	2.9"	2.5"	3.0"	3.2"	4.0"	4.0"	4.0"	4.0"	4.0"	4.0
	+/- 50 PSF	758.7 LB/FT	718.7 LB/FT		4.0"	4.0"	4.0"			4.0"		2.2"		2.3"	2.5"	4.0"	4.0"	4.0"	4.0"	4.0"	4.0
	+/- 54 PSF	828.1 LB/FT	782.4 LB/FT		3.8"	4.0"	4.0"			4.0"		2.1"		2.1"	2.3"	4.0"	4.0"	4.0"	4.0"	4.0"	4.0
120"	+/- 20 PSF	318.3 LB/FT	298.1 LB/FT	4.0"	4.0"	4.0"	4.0"	4.0"	4.0"	4.0"	4.0"	4.0"	4.0"	4.0"	4.0"	4.0"	4.0"	4.0"	4.0"	4.0"	4.0
	+/- 30 PSF	522.8 LB/FT	469.6 LB/FT	4.0"	4.0"	4.0"	4.0"		4.0"	4.0"	3.8"	3.3"	2.8"	3.4"	3.8"	4.0"	4.0"	4.0"	4.0"	4.0"	4.0
	+/- 40 PSF	726.9 LB/FT	643.7 LB/FT	4.0"	4.0"	4.0"	4.0"		4.0"	4.0"		2.4"	2.1"	2.4"	2.8"	4.0"	4.0"	4.0"	4.0"	4.0"	4.0
	+/- 50 PSF	930.6 LB/FT	820.5 LB/FT		3.5"	4.0"	4.0"			3.8"					2.2"	4.0"	4.0"	4.0"	4.0"	4.0"	4.0
	+/- 52 PSF	971.3 LB/FT	856.2 LB/FT		3.3"	4.0"	4.0"			3.6"					2.1"	4.0"	4.0"	4.0"	4.0"	4.0"	4.0
132"	+/- 20 PSF	397.7 LB/FT	340.7 LB/FT	4.0"	4.0"	4.0"	4.0"	4.0"	4.0"	4.0"	4.0"	4.0"	3.8"	4.0"	4.0"	4.0"	4.0"	4.0"	4.0"	4.0"	4.0
	+/- 30 PSF	633.9 LB/FT	530.5 LB/FT	4.0"	4.0"	4.0"	4.0"		4.0"	4.0"	3.3"	2.8"	2.4"	2.8"	3.3"	4.0"	4.0"	4.0"	4.0"	4.0"	4.0
	+/- 40 PSF	869.6 LB/FT	723.5 LB/FT		3.8"	4.0"	4.0"			4.0"		2.0"		2.1"	2.4"	4.0"	4.0"	4.0"	4.0"	4.0"	4.0
	+/- 50 PSF	1104.8 LB/FT	919.9 LB/FT			4.0"	4.0"			3.3"						4.0"	4.0"	4.0"	4.0"	4.0"	4.0
144"	+/- 20 PSF	476.3 LB/FT	381.2 LB/FT	4.0"	4.0"	4.0"	4.0"	4.0"	4.0"	4.0"	4.0"	3.7"	3.2"	3.8"	4.0"	4.0"	4.0"	4.0"	4.0"	4.0"	4.0
	+/- 30 PSF	745.6 LB/FT	589.5 LB/FT	4.0"	4.0"	4.0"	4.0"		4.0"	4.0"		2.4"	2.0"	2.4"	2.9"	4.0"	4.0"	4.0"	4.0"	4.0"	4.0
	+/- 40 PSF	1014.4 LB/FT	801.8 LB/FT		3.3"	4.0"	4.0"			3.7"					2.2"	4.0"	4.0"	4.0"	4.0"	4.0"	4.0
	+/- 50 PSF	1282.6 LB/FT	1018.0 LB/FT			4.0"										3.5"	4.0"	4.0"	4.0"	4.0"	4.0

08/11/2017 - 10:00am rickn V:\Projects\14-1323 Magnum III (Security Star) Slat Shutter Florida Product Approval-I.SWP\2017 FBC Update\14-1323a-Dwg-FL17344.1.dwg

ANCHOR SCHEDULE: : INDICATES VALUES NOT APPROVED FOR USE.

INTERIOR MOUNT: SNAP RAIL END RETENTION SHUTTER WITH SINGLE WALL SLATS

ANCHOR NOTES: SEE SHEET 5 FOR ANCHOR NOTES.

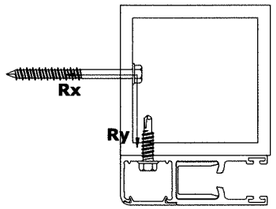

MAXIMUM SPACING (O.C.)

SLAT SPAN	DESIGN PRESSURE	Rx	Ry	1/4" ELCO ULTRACON TO 2846 PSI MIN. CONCRETE; 1.75" MIN. EMBEDMENT; 2.5" MIN. EDGE DISTANCE	1/4" SS ITW TAPCON TO 3192 PSI MIN. CONCRETE; 1.75" MIN. EMBEDMENT; 2.5" MIN. EDGE DISTANCE	5/16" ITW TAPCON: TO 2899 PSI MIN. CONCRETE; 2.25" MIN. EMBEDMENT; 3.125" MIN. EDGE DISTANCE	5/16" ITW TAPCON: TO GROUT-FILLED CONCRETE BLOCK; 2.25" MIN. EMBEDMENT; 4" MIN. EDGE DISTANCE	5/16" ITW TAPCON: TO HOLLOW CONCRETE BLOCK; 1.75" MIN. EMBEDMENT; 4" MIN. EDGE DISTANCE	1/4" POWERS POWER-BOLT TO 3000 PSI MIN. CONCRETE; 2.5" MIN. EMBEDMENT; 3" MIN. EDGE DISTANCE	1/4" ALL-POINTS SOLID-SET: TO 3000 PSI MIN. CONCRETE; 0.875" MIN. EMBEDMENT; 3" MIN. EDGE DISTANCE	1/4" ALL-POINTS SOLID-SET: TO HOLLOW BLOCK; 0.875" MIN. EMBEDMENT; 3" MIN. EDGE DISTANCE	1/4" LAG SCREW TO G=0.55 MIN WOOD; 1.5" MIN. EMBEDMENT; 0.75" MIN. EDGE DISTANCE	5/16" LAG SCREW TO G=0.42 MIN WOOD; 2" MIN. EMBEDMENT; 0.75" MIN. EDGE DISTANCE	#14 WOOD SCREW TO G=0.55 MIN WOOD; 1.5" MIN. EMBEDMENT; 0.75" MIN. EDGE DISTANCE	#14 316 SS SMS W/ FULL THREAD PENETRATION (OR 1/4-20 316 SS THRU-BOLT) W/ 5/8" WASHER TO 0.125" MIN. 6063-T5 ALUM; 0.5" MIN. EDGE DISTANCE	#14 316 SS SMS W/ FULL THREAD PENETRATION (OR 1/4-20 316 SS THRU-BOLT) W/ 5/8" WASHER TO 0.25" MIN. 6063-T5 ALUM; 0.5" MIN. EDGE DISTANCE	3/8" POWERS WEDGE BOLT TO 3000 PSI MIN. CONCRETE; 3.5" MIN. EMBEDMENT; 4.5" MIN. EDGE DISTANCE	#14 316 SS SMS W/ FULL THREAD PENETRATION (OR 1/4-20 316 SS THRU-BOLT) W/ 5/8" WASHER TO 0.125" MIN. A36 STEEL; 0.5" MIN. EDGE DISTANCE	#14 316 SS SMS W/ FULL THREAD PENETRATION (OR 1/4-20 316 SS THRU-BOLT) W/ 5/8" WASHER TO 0.1875" MIN. A36 STEEL; 0.5" MIN. EDGE DISTANCE	#14 316 SS SMS W/ FULL THREAD PENETRATION (OR 1/4-20 316 SS THRU-BOLT) W/ 5/8" WASHER TO 0.25" MIN. A36 STEEL; 0.5" MIN. EDGE DISTANCE	#14 31 SMS W/ THRE PENETR (OR 1/ 316 THRU-E W/ 5 WASHE 0.5" MIN STEE 0.5" M EDG DISTA
48"	+/- 40 PSF	53.4 LB/FT	80.0 LB/FT	4.0"	4.0"	4.0"	4.0"	4.0"	4.0"	4.0"	4.0"	4.0"	4.0"	4.0"	4.0"	4.0"	4.0"	4.0"	4.0"	4.0"	4.0
	+/- 50 PSF	66.7 LB/FT	100.0 LB/FT	4.0"	4.0"	4.0"	4.0"	4.0"	4.0"	4.0"	4.0"	4.0"	4.0"	4.0"	4.0"	4.0"	4.0"	4.0"	4.0"	4.0"	4.0
	+/- 60 PSF	80.0 LB/FT	120.0 LB/FT	4.0"	4.0"	4.0"	4.0"	4.0"	4.0"	4.0"	4.0"	4.0"	4.0"	4.0"	4.0"	4.0"	4.0"	4.0"	4.0"	4.0"	4.0
	+/- 70 PSF	93.4 LB/FT	140.0 LB/FT	4.0"	4.0"	4.0"	4.0"	4.0"	4.0"	4.0"	4.0"	4.0"	4.0"	4.0"	4.0"	4.0"	4.0"	4.0"	4.0"	4.0"	4.0
	+/- 80 PSF	106.7 LB/FT	160.0 LB/FT	4.0"	4.0"	4.0"	4.0"	4.0"	4.0"	4.0"	4.0"	4.0"	4.0"	4.0"	4.0"	4.0"	4.0"	4.0"	4.0"	4.0"	4.0
	+/- 90 PSF	120.1 LB/FT	180.0 LB/FT	4.0"	4.0"	4.0"	4.0"	4.0"	4.0"	4.0"	4.0"	4.0"	4.0"	4.0"	4.0"	4.0"	4.0"	4.0"	4.0"	4.0"	4.0
	+/- 100 PSF	133.4 LB/FT	200.0 LB/FT	4.0"	4.0"	4.0"	4.0"	4.0"	4.0"	4.0"	4.0"	4.0"	4.0"	4.0"	4.0"	4.0"	4.0"	4.0"	4.0"	4.0"	4.0
	+/- 110 PSF	148.3 LB/FT	220.5 LB/FT	4.0"	4.0"	4.0"	4.0"	4.0"	4.0"	4.0"	4.0"	4.0"	4.0"	4.0"	4.0"	4.0"	4.0"	4.0"	4.0"	4.0"	4.0
	+/- 120 PSF	225.5 LB/FT	260.2 LB/FT	4.0"	4.0"	4.0"	4.0"	4.0"	4.0"	4.0"	4.0"	4.0"	4.0"	4.0"	4.0"	4.0"	4.0"	4.0"	4.0"	4.0"	4.0
	+/- 130 PSF	302.9 LB/FT	300.4 LB/FT	4.0"	4.0"	4.0"	4.0"	4.0"	4.0"	4.0"	4.0"	4.0"	4.0"	4.0"	4.0"	4.0"	4.0"	4.0"	4.0"	4.0"	4.0
60"	+/- 40 PSF	66.7 LB/FT	100.0 LB/FT	4.0"	4.0"	4.0"	4.0"	4.0"	4.0"	4.0"	4.0"	4.0"	4.0"	4.0"	4.0"	4.0"	4.0"	4.0"	4.0"	4.0"	4.0
	+/- 50 PSF	83.4 LB/FT	125.0 LB/FT	4.0"	4.0"	4.0"	4.0"	4.0"	4.0"	4.0"	4.0"	4.0"	4.0"	4.0"	4.0"	4.0"	4.0"	4.0"	4.0"	4.0"	4.0
	+/- 60 PSF	184.6 LB/FT	173.8 LB/FT	4.0"	4.0"	4.0"	4.0"	4.0"	4.0"	4.0"	4.0"	4.0"	4.0"	4.0"	4.0"	4.0"	4.0"	4.0"	4.0"	4.0"	4.0
	+/- 70 PSF	289.4 LB/FT	224.0 LB/FT	4.0"	4.0"	4.0"	4.0"	4.0"	4.0"	4.0"	4.0"	4.0"	4.0"	4.0"	4.0"	4.0"	4.0"	4.0"	4.0"	4.0"	4.0
	+/- 84 PSF	436.4 LB/FT	295.2 LB/FT	4.0"	4.0"	4.0"	4.0"	4.0"	4.0"	4.0"	4.0"	4.0"	3.6"	4.0"	4.0"	4.0"	4.0"	4.0"	4.0"	4.0"	4.0
72"	+/- 40 PSF	232.5 LB/FT	159.9 LB/FT	4.0"	4.0"	4.0"	4.0"	4.0"	4.0"	4.0"	4.0"	4.0"	4.0"	4.0"	4.0"	4.0"	4.0"	4.0"	4.0"	4.0"	4.0
	+/- 50 PSF	367.2 LB/FT	220.6 LB/FT	4.0"	4.0"	4.0"	4.0"	4.0"	4.0"	4.0"	4.0"	4.0"	4.0"	4.0"	4.0"	4.0"	4.0"	4.0"	4.0"	4.0"	4.0
	+/- 68 PSF	610.0 LB/FT	331.4 LB/FT	4.0"	4.0"	4.0"	4.0"	4.0"	4.0"	4.0"	4.0"	3.1"	2.6"	3.2"	4.0"	4.0"	4.0"	4.0"	4.0"	4.0"	4.0
84"	+/- 40 PSF	442.6 LB/FT	226.8 LB/FT	4.0"	4.0"	4.0"	4.0"	4.0"	4.0"	4.0"	4.0"	4.0"	3.6"	4.0"	4.0"	4.0"	4.0"	4.0"	4.0"	4.0"	4.0
	+/- 50 PSF	609.4 LB/FT	298.7 LB/FT	4.0"	4.0"	4.0"	4.0"	4.0"	4.0"	4.0"	4.0"	3.1"	2.6"	3.3"	4.0"	4.0"	4.0"	4.0"	4.0"	4.0"	4.0
	+/- 60 PSF	776.4 LB/FT	371.4 LB/FT	4.0"	4.0"	4.0"	4.0"		4.0"	4.0"	3.3"	2.5"	2.1"	2.6"	3.9"	4.0"	4.0"	4.0"	4.0"	4.0"	4.0
96"	+/- 40 PSF	631.0 LB/FT	284.2 LB/FT	4.0"	4.0"	4.0"	4.0"	4.0"	4.0"	4.0"	4.0"	3.0"	2.6"	3.2"	4.0"	4.0"	4.0"	4.0"	4.0"	4.0"	4.0
	+/- 50 PSF	831.8 LB/FT	367.4 LB/FT	4.0"	4.0"	4.0"	4.0"		4.0"	4.0"	3.2"	2.3"		2.4"	3.8"	4.0"	4.0"	4.0"	4.0"	4.0"	4.0
	+/- 57 PSF	972.6 LB/FT	426.2 LB/FT		4.0"	4.0"	4.0"		4.0"	4.0"				2.1"	3.3"	4.0"	4.0"	4.0"	4.0"	4.0"	4.0
108"	+/- 30 PSF	573.3 LB/FT	243.4 LB/FT	4.0"	4.0"	4.0"	4.0"	4.0"	4.0"	4.0"	4.0"	3.4"	2.8"	3.6"	4.0"	4.0"	4.0"	4.0"	4.0"	4.0"	4.0
	+/- 40 PSF	809.6 LB/FT	336.6 LB/FT	4.0"	4.0"	4.0"	4.0"		4.0"	4.0"	3.3"	2.4"	2.0"	2.5"	4.0"	4.0"	4.0"	4.0"	4.0"	4.0"	4.0
	+/- 50 PSF	1046.3 LB/FT	431.2 LB/FT		4.0"	4.0"	4.0"			4.0"					3.2"	4.0"	4.0"	4.0"	4.0"	4.0"	4.0
	+/- 54 PSF	1141.2 LB/FT	469.3 LB/FT		3.7"	4.0"	4.0"			4.0"					2.9"	4.0"	4.0"	4.0"	4.0"	4.0"	4.0
120"	+/- 30 PSF	710.7 LB/FT	281.7 LB/FT	4.0"	4.0"	4.0"	4.0"	4.0"	4.0"	4.0"	3.8"	2.7"	2.3"	2.9"	4.0"	4.0"	4.0"	4.0"	4.0"	4.0"	4.0
	+/- 40 PSF	984.5 LB/FT	386.2 LB/FT		4.0"	4.0"	4.0"		4.0"	4.0"				2.1"	3.5"	4.0"	4.0"	4.0"	4.0"	4.0"	4.0
	+/- 50 PSF	1258.9 LB/FT	492.2 LB/FT		3.4"	4.0"	4.0"			3.8"					2.7"	4.0"	4.0"	4.0"	4.0"	4.0"	4.0
	+/- 52 PSF	1313.9 LB/FT	513.6 LB/FT		3.2"	4.0"	4.0"			3.7"					2.6"	4.0"	4.0"	4.0"	4.0"	4.0"	4.0
132"	+/- 20 PSF	534.0 LB/FT	204.4 LB/FT	4.0"	4.0"	4.0"	4.0"	4.0"	4.0"	4.0"	4.0"	3.7"	3.1"	3.9"	4.0"	4.0"	4.0"	4.0"	4.0"	4.0"	4.0
	+/- 30 PSF	846.1 LB/FT	318.2 LB/FT	4.0"	4.0"	4.0"	4.0"		4.0"	4.0"	3.3"	2.3"		2.5"	4.0"	4.0"	4.0"	4.0"	4.0"	4.0"	4.0
	+/- 40 PSF	1159.1 LB/FT	434.0 LB/FT		3.7"	4.0"	4.0"			4.0"					3.0"	4.0"	4.0"	4.0"	4.0"	4.0"	4.0
	+/- 50 PSF	1472.8 LB/FT	551.8 LB/FT			4.0"	3.9"			3.3"					2.4"	3.9"	4.0"	4.0"	4.0"	4.0"	4.0
144"	+/- 20 PSF	628.8 LB/FT	228.7 LB/FT	4.0"	4.0"	4.0"	4.0"	4.0"	4.0"	4.0"	4.0"	3.1"	2.6"	3.3"	4.0"	4.0"	4.0"	4.0"	4.0"	4.0"	4.0
	+/- 30 PSF	981.5 LB/FT	353.6 LB/FT	4.0"	4.0"	4.0"	4.0"		4.0"	4.0"				2.1"	3.6"	4.0"	4.0"	4.0"	4.0"	4.0"	4.0
	+/- 40 PSF	1335.2 LB/FT	481.0 LB/FT		3.2"	4.0"	4.0"			3.7"					2.7"	4.0"	4.0"	4.0"	4.0"	4.0"	4.0
	+/- 50 PSF	1689.9 LB/FT	610.7 LB/FT			4.0"									2.1"	3.4"	4.0"	4.0"	4.0"	4.0"	4.0

V:\Projects\14-1323 Magnum III (Security Star) Slat Shutter Florida Product Approval-I.SWP2017 FBC Update\14-1323e-Dwg-FL17344.1.dwg
08/11/2017 - 10:00am nickn

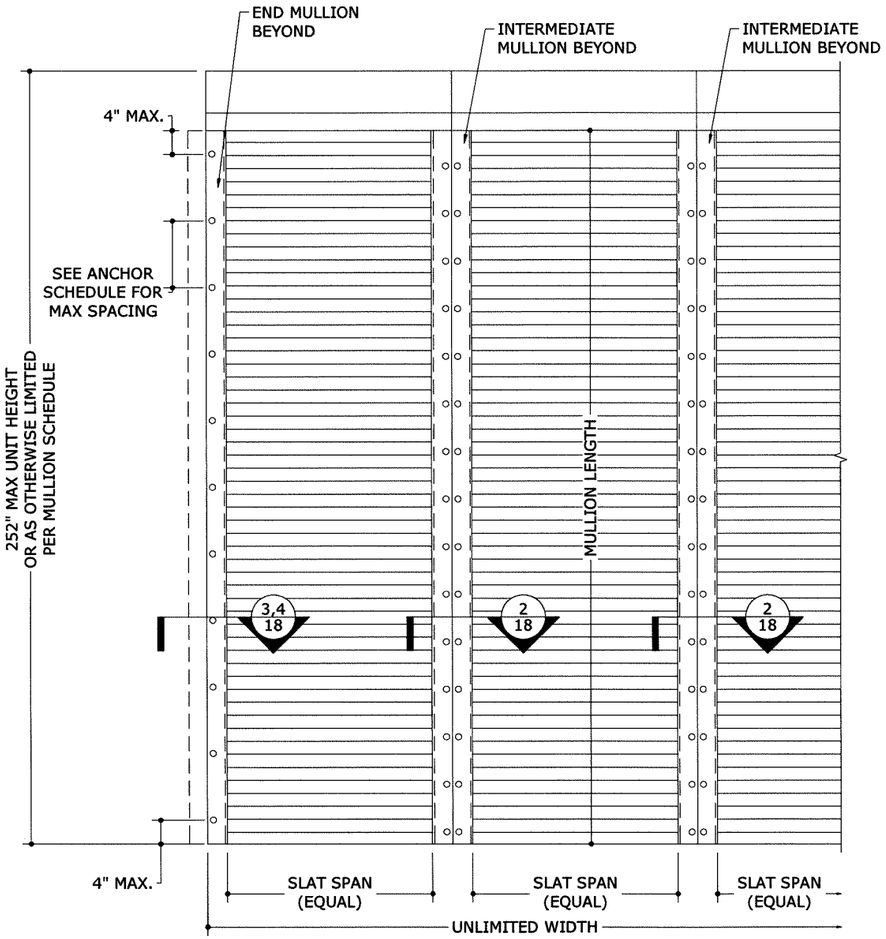

1/18 TYPICAL SHUTTER WITH MULLIONS

N.T.S. EXTERIOR ELEV

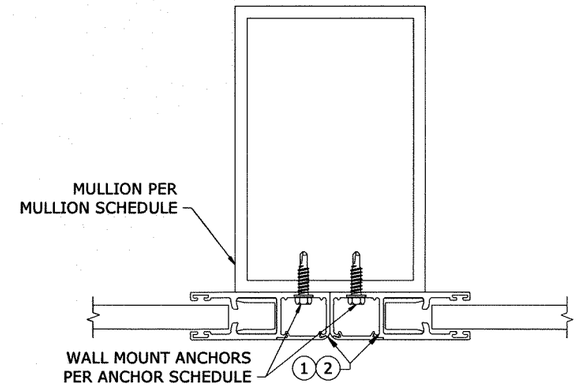

NOTE: SEE SHEET 4 FOR ADDITIONAL LIMITATIONS AND REQUIREMENTS.

2/18 TYPICAL MOUNT TO INTERMEDIATE MULLION

N.T.S. HORIZ SECTION

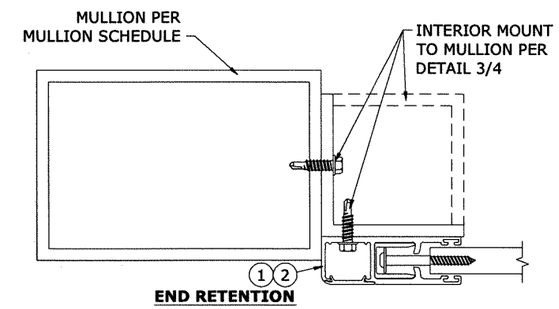

3/18 INTERIOR MOUNT TO END MULLION

N.T.S. HORIZ SECTION

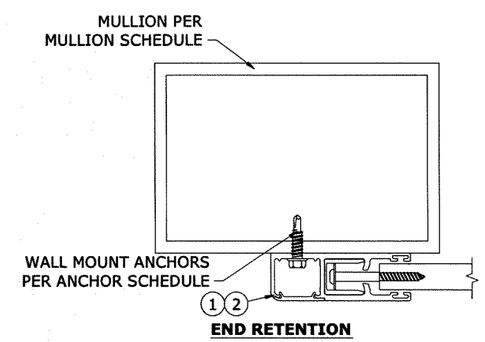

4/18 END MULLION

N.T.S. HORIZ SECTION

08/11/2017 - 10:00am rickn V:\Projects\14-1323 Magnum III (Security Star) Slat Shutter Florida Product Approval-I-SWP\2017 FBC Update\14-1323a-Dwg-FL17344.1.dwg

END RETENTION MULLION SCHEDULE

SLAT SPAN	DESIGN PRESSURE	3"x3"x0.25" 6063-T6 ALUMINUM TUBE						4"x6"x0.25" 6063-T6 ALUMINUM TUBE						4"x8"x0.25" 6063-T6 ALUMINUM TUBE					
		INTERMEDIATE MULLION		END MULLION				INTERMEDIATE MULLION		END MULLION				INTERMEDIATE MULLION		END MULLION			
		MAX MULLION LENGTH	END REACTION Rsum	MAX MULLION LENGTH	END REACTION Rv	END REACTION Rt	END REACTION Rsum	MAX MULLION LENGTH	END REACTION Rsum	MAX MULLION LENGTH	END REACTION Rv	END REACTION Rt	END REACTION Rsum	MAX MULLION LENGTH	END REACTION Rsum	MAX MULLION LENGTH	END REACTION Rv	END REACTION Rt	END REACTION Rsum
UP TO 96"	UP TO 60 PSF	58.5"	2202 LB	49.8"	1519 LB	937 LB	1785 LB	110.4"	4153 LB	89.1"	2717 LB	1677 LB	3193 LB	138.1"	5199 LB	96.9"	2954 LB	1823 LB	3471 LB
	UP TO 80 PSF	51.3"	2665 LB	44.6"	1896 LB	1157 LB	2221 LB	95.6"	4962 LB	79.3"	3373 LB	2058 LB	3951 LB	117.6"	6106 LB	87.0"	3702 LB	2259 LB	4337 LB
	UP TO 104 PSF	44.4"	3084 LB	38.6"	2200 LB	1343 LB	2578 LB	82.6"	5741 LB	68.5"	3902 LB	2381 LB	4571 LB	101.6"	7064 LB	78.9"	4496 LB	2744 LB	5267 LB
UP TO 144"	UP TO 60 PSF	46.7"	2932 LB	37.8"	2436 LB	1187 LB	2710 LB	86.9"	5459 LB	67.4"	4347 LB	2119 LB	4836 LB	106.9"	6717 LB	80.0"	5159 LB	2514 LB	5739 LB
	UP TO 86 PSF	38.7"	3537 LB	31.4"	2931 LB	1434 LB	3263 LB	72.0"	6585 LB	56.0"	5230 LB	2558 LB	5822 LB	88.6"	8102 LB	66.4"	6207 LB	3036 LB	6910 LB
UP TO 180"	UP TO 67 PSF	38.6"	3545 LB	30.3"	3124 LB	1392 LB	3420 LB	71.8"	6601 LB	54.2"	5590 LB	2490 LB	6119 LB	88.4"	8122 LB	64.5"	6647 LB	2961 LB	7277 LB
UP TO 216"	UP TO 55 PSF	38.3"	3569 LB	29.4"	3291 LB	1368 LB	3564 LB	71.4"	6645 LB	52.6"	5899 LB	2451 LB	6388 LB	87.8"	8177 LB	62.7"	7024 LB	2919 LB	7606 LB

1. "END RETENTION MULLION SCHEDULE" IS APPLICABLE TO ALL END RETENTION MULLIONS.
2. "INTERMEDIATE MULLIONS" AND "END MULLIONS" ARE AS DEFINED IN ELEVATION 1/19.
3. ALLOWABLE DESIGN PRESSURES AND SLAT SPANS INDICATED ARE FOR DETERMINING PERMISSIBLE MULLION LENGTHS ONLY. ACTUAL SLAT SPANS AND DESIGN PRESSURES SHALL NOT EXCEED THOSE INDICATED IN SPAN SCHEDULES.
4. "END REACTIONS" ARE LISTED FOR EACH COMBINATION OF DESIGN LOAD, MULLION TYPE, & SLAT SPAN. CHOOSE MOUNTING CONNECTIONS (PER APPLICABLE CONNECTION DETAILS HEREIN) THAT PROVIDES "CONNECTION CAPACITY" GREATER THAN OR EQUAL TO "END REACTIONS" GIVEN ABOVE.
5. THIS SCHEDULE MAY BE USED FOR ALL MOUNTING CONDITIONS LISTED HEREIN.
6. SEE MULLION HORIZONTAL SECTIONS ON SHEET 18 FOR REQUIRED MULLION ORIENTATIONS.

SCHEDULE 'A'

ANCHOR TYPE	MINIMUM SPACING	MINIMUM EDGE DISTANCE	CONNECTION DETAIL	CONNECTION CAPACITY	
3/8" POWERS WEDGE BOLTS W/ 3-1/2" EMBED TO 3KSI MIN. CONCRETE	4.5"	4.5"	1/12	Tcap	4410 LB
				Vcap	3065 LB
			2/12	Tcap	8820 LB
				Vcap	6130 LB
	2.5"	4.5"	3/12	Tcap	11819 LB
				Vcap	10176 LB
3/8" POWERS STEEL DROPIN W/ 1-9/16" EMBED TO 3KSI MIN. CONCRETE	4.5"	5.25"	1/12	Tcap	1590 LB
				Vcap	2290 LB
			2/12	Tcap	3180 LB
				Vcap	4580 LB
	2.5"	5.25"	3/12	Tcap	3689 LB
				Vcap	5313 LB
5/16" ITW TAPCON XL OR ELCO ULTRACON W/ 2-1/4" MIN. EMBED TO 3.515 KSI MIN. CONCRETE	5.0"	3.125"	1/12	Tcap	1576 LB
				Vcap	1700 LB
			2/12	Tcap	3152 LB
				Vcap	3400 LB

SCHEDULE 'A' NOTES:

1. INTERIOR MOUNT:
   1.1. FOR ALL MULLIONS, 'Rsum' VALUES IN MULLION SCHEDULE SHALL NOT EXCEED M 'Vcap' VALUES NOTED IN SCHEDULE 'A'.
2. WALL MOUNT:
   2.1. FOR INTERMEDIATE END RETENTION MULLIONS AND ALL NON-END RETENTION MULLIONS, 'Rsum' VALUES IN MULLION SCHEDULE SHALL NOT EXCEED MAX 'Tcap' VALUES NOTED IN SCHEDULE 'A'.
   2.2. FOR END RETENTION END MULLIONS, **Rv/Vcap + Rt/Tcap SHALL BE LESS TH OR EQUAL TO 1.0**, WHERE 'Rv' AND 'Rt' A PER MULLION SCHEDULE, AND 'Tcap' AND 'Vcap' ARE PER SCHEDULE 'A'.

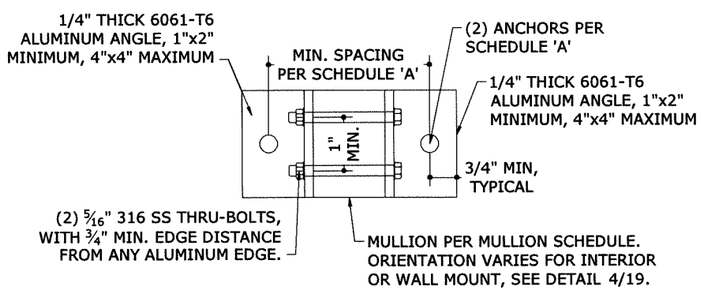

1/19 INTERIOR OR WALL MOUNT
N.T.S.

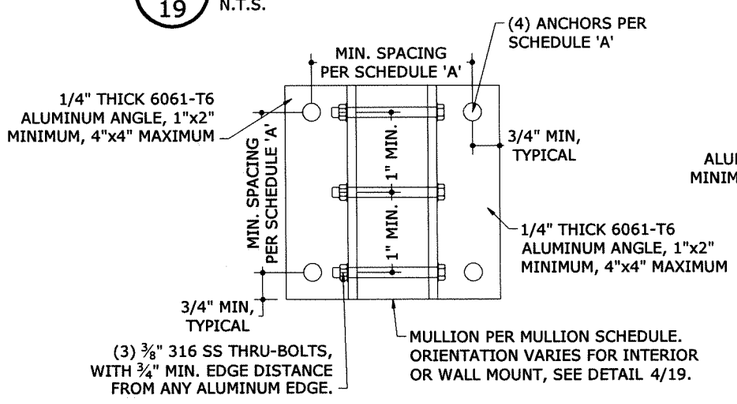

2/19 INTERIOR OR WALL MOUNT
N.T.S.

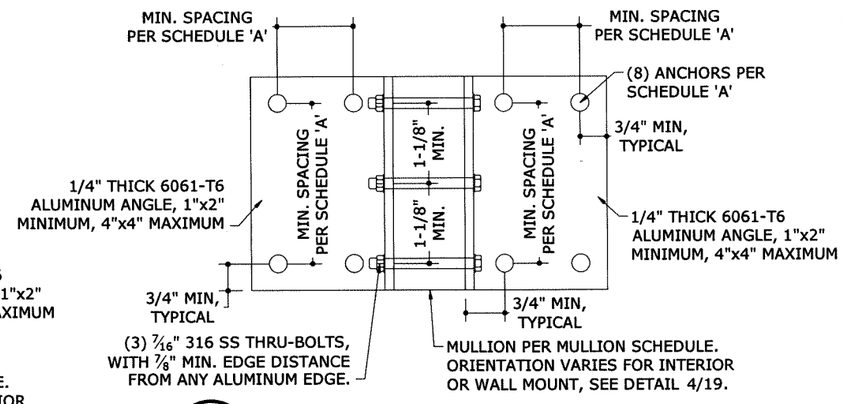

3/19 INTERIOR OR WALL MOUNT
N.T.S.

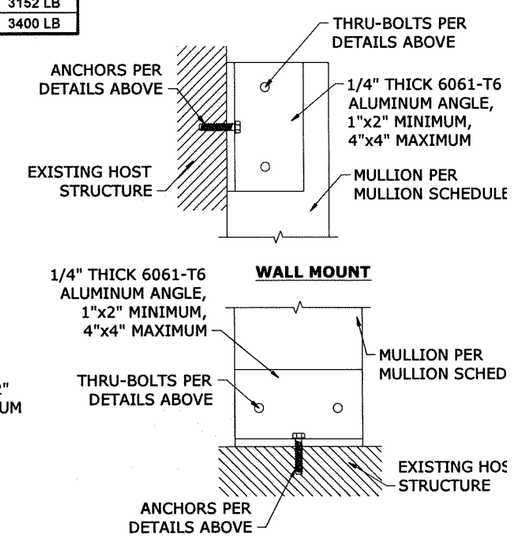

4/19 MOUNTING CONDITIONS VERTICAL SECTIONS
N.T.S.

FRANK L. B
LICEN
No PE0
STAT
FLO
PROFESSION

V:\Projects\14-1323 Magnum III (Security Star) Slat Shutter Florida Product Approval-I.SWP\2017 FBC Update\14-1323e-Dwg-FL17344.1.dwg
08/11/2017 - 10:00am nickn